TOWN OF GILBERT

September 10, 2020

SUPPLEMENT TO MAG UNIFORM STANDARD DETAILS FOR PUBLIC WORKS CONSTRUCTION

Amendments	*Section No. and Title*	*Effective Date*
• Revised detail note to call out bedding material per TOG Engineering Standards.	GIL-302 Bedding Detail – C-900 Water Pipe	11/20/2017
• Added driveway and sidewalk dimensions, specified sections and details as "Not to Scale"	GIL-210 Minor Commercial Driveway	01/07/2018
• Amended dimension D1 for 2 lane roads with raised medians to D4. • Additional sight distances added for dimension D4	GIL-212 Sight Distance at Controlled Intersections	01/07/2018
• Specified metal dimension as 6 inch flat • Changed material thickness from .080 gauge to .125 gauge	GIL-220 Street Sign	01/07/2018
• Specified metal dimension as 6 inch flat • Changed material thickness from .080 gauge to .125 gauge	GIL-221 Street Sign With Dead End or No Outlet	01/07/2018
• Specified metal dimension as 6 inch flat • Changed material thickness from .080 gauge to .125 gauge	GIL-223 Street Sign (Street Name Change at Intersection)	01/07/2018
• Revised Mast Arm Length • Revised ADOT Pole type to include Type 'W' • Revised bolt hole spacing on luminare connection plate detail from 7" to 7.07"	GIL-810 25' Luminaire Mast Arm	01/07/2018
• Revised to only allow for double strap tapping saddle or approved equal • Revised service line depth from 14 inch min. to be 7-10 depth range • Revised to show minimum clearances • Revised to show proper water meter box and lid	GIL-310 1" to 2" Water Service Installation	05/19/2018
• Revised to require street sign sheeting to be 3M DG³ or approved equal	GIL-220, GIL-221 & GIL-223	05/19/2018
• Replaces existing detail GIL-345 in its entirety	GIL-345-1 & GIL-345-2	05/19/2018
• Revised detail to provide concrete foundation to be 4" above grade • Added crowned top • Added leveling nuts • Added struck joints to improve drainage	GIL-932	05/19/2018
• Revised to show minimum clearances • Revised to require root barrier if trees and shrubs are planted within 6 feet	GIL-310 1" to 2" Water Service Installations	5/18/2019
• Revised to be standard for all round tapered poles • Removed base cover	GIL-901	5/18/2019
• Removed from Standards	GIL-902, GIL-905, GIL-906, GIL-910, GIL-921, GIL-923, GIL-924 & GIL-925	5/18/2019
• Revised to remove stamped asphalt from raised medians	GIL-250 & GIL-251	9/15/19
• Various revisions to Traffic Signal Equipment	GIL-823, GIL-831, GIL-841, GIL-842, GIL-843, GIL-844, GIL-850, GIL-851, GIL-861, GIL-862, GIL-871, GIL-872	4/23/2020
• Revised paint code	GIL-901	4/23/2020

• Revised traffic pole details	GIL-801, GIL-802, GIL-803, GIL-804 *New Detail, GIL-805 *New Detail	9/10/2020
• New Utility Pothole Repair detail	GIL-273 * New detail	9/10/2020
• Revised photo cell voltage range	GIL-945	9/10/2020

100 SERIES: GENERAL DETAILS

New Detail No.	Description	Old Detail No.
GIL-180	SINGLE REFUSE AREA	80-4
GIL-181	DOUBLE-WIDE BIN ENCLOSURES	80-1
GIL-182	TRIPLE-WIDE BIN ENCLOSURES	80-2
GIL-183	RESTAURANT ENCLOSERN WITH GREASE TRAP	80-5
GIL-184	LARGE COMPACTOR REFUSE AREA	80-6
GIL-189	BIN ENCLOSURE SCREEN WALL, SAFETY POST & GATE STANDARDS	80-3

200 SERIES: STREET DETAILS

New Detail No.	Description	Old Detail No.
GIL-210	COMMERCIAL DRIVEWAY	M-42
GIL-211	SIGHT DISTANCE AT UNCONTROLLED INTERSECTIONS	92
GIL-212	SIGHT DISTANCE AT CONTROLLED INTERSECTIONS	93
GIL-220	STREET SIGN	70
GIL-221	STREET SIGN WITH DEAD END OR NO OUTLET	71
GIL-223	STREET SIGN – STREET NAME CHANGE AT INTERSECTION	72
GIL-226	FIRE LANE SIGN DETAIL	63
GIL-227	SIGN POST AND BASE	79
GIL-231	BIKE PAVEMENT MARKING STENCILS	301A
GIL-232	HANDICAP PARKING SYMBOLS	301B
GIL-233	RAISED PAVEMENT MARKER DETAILS	306
GIL-240	CURB MARKINGS FOR RAISED MEDIANS AND MEDIAN ISLANDS	304/304A/304B
GIL-250	ASPHALT STAMPING DETAIL BRICK & ASHLAR SLATE TEMPLATE	402/403B
GIL-251	ASPHALT STAMPING DETAIL TRI-HEX KEYSTONE & TORTOISE	403A/404
GIL-260	SHELL TEMPLATE DETECTABLE WARNING MAT EXISTING RAMPS	NEW
GIL-261	DETECTABLE WARNING PANEL DETAIL NEW RAMP	NEW
GIL-270	BACKFILL, PAVEMENT & SURFACE REPLACEMENT	NEW
GIL-271	TRENCH PLATING	NEW
GIL-272	TRAFFIC DRUM DETAILS	NEW
GIL-273	UTILITY POTHOLE REPAIR	

300 SERIES: WATER DETAILS

New Detail No.	Description	Old Detail No.
GIL-301	BEDDING DETAIL - CONCRETE PIPE	84
GIL-302	BEDDING DETAIL - C-900 WATER PIPE	85
GIL-310	1” TO 2” WATER SERVICE INSTALLATION	62
GIL-320-1	FIRE HYDRANT	60
GIL-320-2	FIRE HYDRANT	60A
GIL-325	PAVEMENT MARKERS FOR FIRE HYDRANTS	61
GIL-340-1	3", 4" & 6" WATER METER	NEW
GIL-340-2	STANDARD WATER METER VAULT	NEW
GIL-345	PARALLEL 2" WATER METER VAULT	NEW
GIL-349	1" AND 2" WATER SERVICE ABANDONMENT	NEW
GIL-350	2" AND SMALLER REDUCED PRESSURE PRINCIPLE	83L
GIL-351	ASSEMBLY 2 1/2" AND LARGER REDUCED PRESSURE	83
GIL-359	PRINCIPLE ASSEMBLY GUARD POSTS	83B
GIL-360	1" AIR RELEASE VALVE	83A

400 SERIES: SEWER DETAILS

New Detail No.	Description	Old Detail No.
GIL-401	BEDDING DETAIL - PVC SEWER PIPE BEDDING	86
GIL-402	DETAIL - VCP SEWER PIPE	87
GIL-410	4” SEWER SERVICE INSTALLATION	64
GIL-419	4" SEWER SERVICE ABANDONMENT	NEW

700 SERIES: RECLAIMED WATER DETAILS

New Detail No.	Description	Old Detail No.
GIL-701	BEDDING DETAIL - RECLAIMED WATER LINE	88
GIL-710	RECLAIMED MANUAL SHUTOFF VALVES*	NEW
GIL-715	RECLAIMED VALVE LIDS*	NEW
GIL-720	RECLAIMED WATER METERS*	NEW
GIL-730	RECLAIMED AIR/VACUUM RELIEF VALVES*	NEW
GIL-740	RECLAIMED AUTOMATED TURNOUTS*	NEW

*NEED TO BE DEVELOPED

September 10, 2020

800 SERIES: TRAFFIC SIGNAL DETAILS

New Detail No.	Description	Old Detail No.
GIL-801	"Q" , "R", & "W" POLE DETAILS	112-A
GIL-802	"Q" , "R", & "W" POLE DETAILS	112-B
GIL-803	"Q" , "R", & "W" POLE DETAILS	112-C
GIL-804	TYPE "A-1" POLE DETAILS	NEW
GIL-805	BICYCLE / PEDESTRIAN PUSH BUTTON POLE	NEW
GIL-810	25' LUMINAIRE MAST ARM	111
GIL-823	STANDARD VIDEO DETECTION DETAIL	113
GIL-831	INTERCONNECT TRENCHING AND JOINT UTILITY	100
GIL-841	TRENCHING DETAIL NO. 7 PULL BOX TYPICAL	94
GIL-842	INSTALLATION FOR FIBER INTERCONNECT NO. 7 PULL	95
GIL-843	BOX TYPICAL INSTALLATION FOR TRAFFIC SIGNALS	96
GIL-844	TRAFFIC SIGNAL PULLBOX	102
GIL-850	NO. 9 VAULT AND COVER DETAIL	NEW
GIL-851	IMSA WIRE PHASE IDENTIFICATION	NEW
GIL-861	WIRE COLOR CODE AND IDENTIFICATION	106
GIL-862	CCTV CAMERA DETAIL	107
GIL-871	ETHERNET RADIO DETAIL	
GIL-872	TRAFFIC SIGNAL METER PEDISTAL	110
	CONTROL CABINET FOUNDATION	

900 SERIES: LIGHTING DETAILS

New Detail No.	Description	Old Detail No.
GIL-901	ROUND TAPERED POLE - ARTERIAL STREETS	P9A
GIL-910	POST TOP STREET LIGHT - RESIDENTIAL STREETS	P8
GIL-919	POLE HANDHOLE DETAIL 4⅛" X 10⅜" REINFORCED	H2
GIL-932	CONCRETE FOUNDATION DETAIL	PF3
GIL-941	FUSING AND GROUNDING DETAIL SRP AREA	FG1
GIL-942	FUSING AND GROUNDING DETAIL APS AREA	FG2
GIL-945	PHOTO CONTROL DETAIL	PC1

September 10, 2020

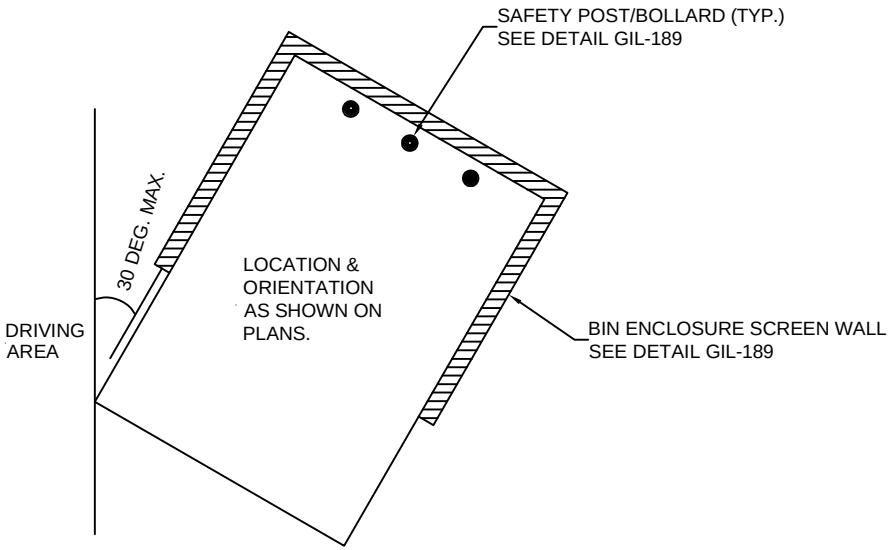

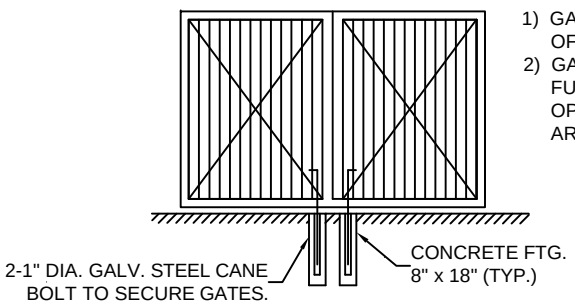

1) GATES SHALL BE FULL HEIGHT OF SCREEN WALLS.
2) GATES SHALL BE DESIGNED TO FULLY SCREEN ENCLOSED BIN(S). OPEN MESH OR RAIL DESIGNS ARE NOT PERMITTED.

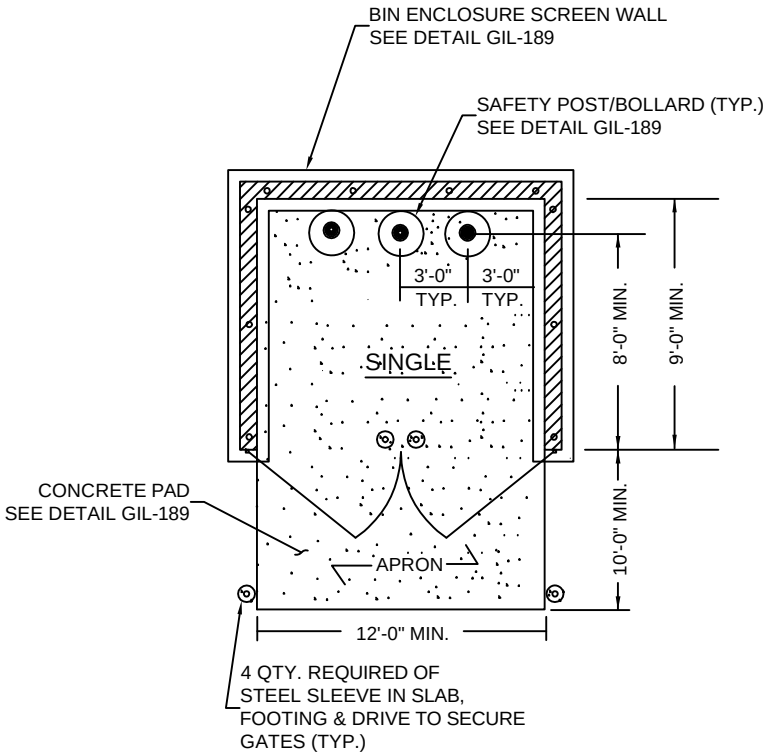

GILBERT ARIZONA	STANDARD DETAIL	SINGLE REFUSE AREA	APPROVED TOWN ENGINEER DATE	DETAIL NO. GIL-180

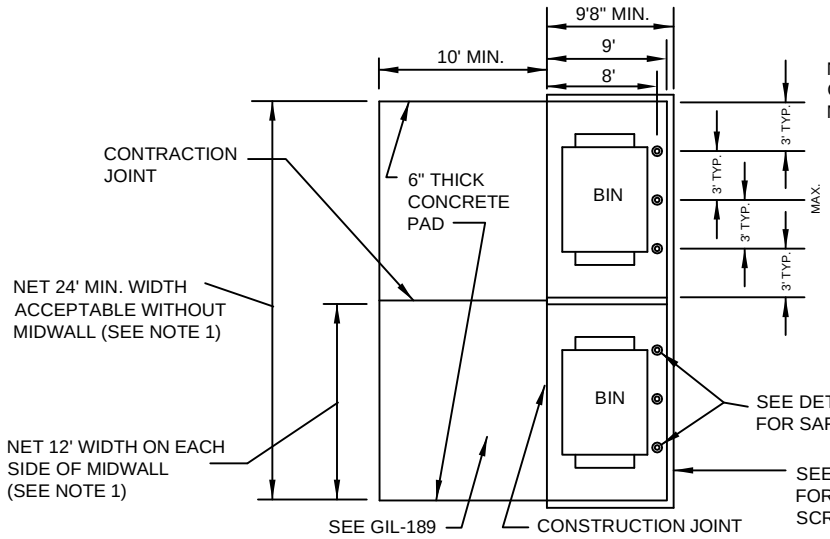

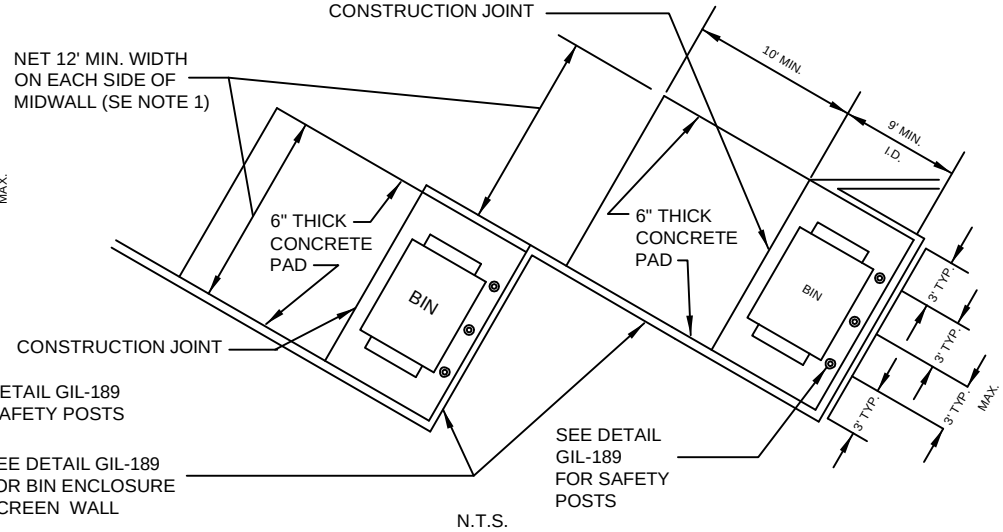

DOUBLE WIDE BIN ENCLOSURE CONFIGURATIONS

NOTES:

1. DOUBLE-WIDE BIN ENCLOSURES SHALL HAVE A NET ENCLOSURE OPENING OF 24 FEET WITHOUT MIDWALLS, ALTHOUGH NOT PREFERRED. DOUBLE-WIDE BIN ENCLOSURES CAN BE DESIGNED WITH MIDWALLS WITH A NET ENCLOSURE OPENING OF 12 FEET ON EACH SIDE OF MIDWALL.
2. GATES, HINGES & MOUNTING HARDWARE SHALL BE INSTALLED SO THERE IS A MIN. 9 FOOT DEPTH CREATED WITHIN EACH ENCLOSURE AND WITH 8 FOOT DEPTH FROM CENTERLINE OF BOLLARD TO INSIDE EDGE OF GATE.
3. GATES, HINGES AND MOUNTING HARDWARE SHALL NOT INTRUDE UPON MINIMUM NET ENCLOSURE OPENING.
4. BIN ENCLOSURES ARE TO BE ANGLED NO MORE THAN 30 DEGREES FROM THE CENTER LINE OF THE SOLID WASTE COLLECTION VEHICLE ROUTE.
5. BINS THAT ARE VISIBLE FROM A PUBLIC ROADWAY SHALL HAVE ENCLOSURE GATES THAT SCREEN THE BINS FROM PUBLIC VIEW.
6. BIN ENCLOSURES TO BE A MIN. 5 FEET FROM ANY PLANNED OR EXISTING STRUCTURE AT ITS CLOSEST POINT. (FIRE CODE)

MAX. BIN DEVIATION

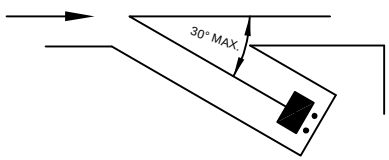

GILBERT ARIZONA	STANDARD DETAIL	DOUBLE WIDE BIN ENCLOSURES	APPROVED TOWN ENGINEER DATE	DETAIL NO. GIL-181

MAX. BIN DEVIATION

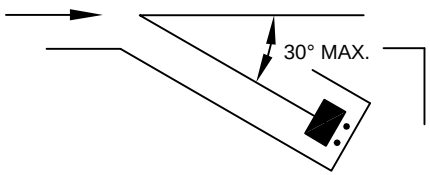

NOTES:

1. GATES, HINGES AND MOUNTING HARDWARE SHALL BE INSTALLED SO HERE IS A MINIMUM 9 FOOT DEPTH CREATED WITHIN EACH ENCLOSURE.
2. BIN ENCLOSURES ARE TO BE ANGLED NO MORE THAN 30 DEGREES FROM THE CENTER LINE OF THE SOLID WASTE COLLECTION VEHICLE ROUTE.
3. CONTRACTION JOINTS MAY BE EITHER SCORED OR SAWCUT 1 INCH DEEP.

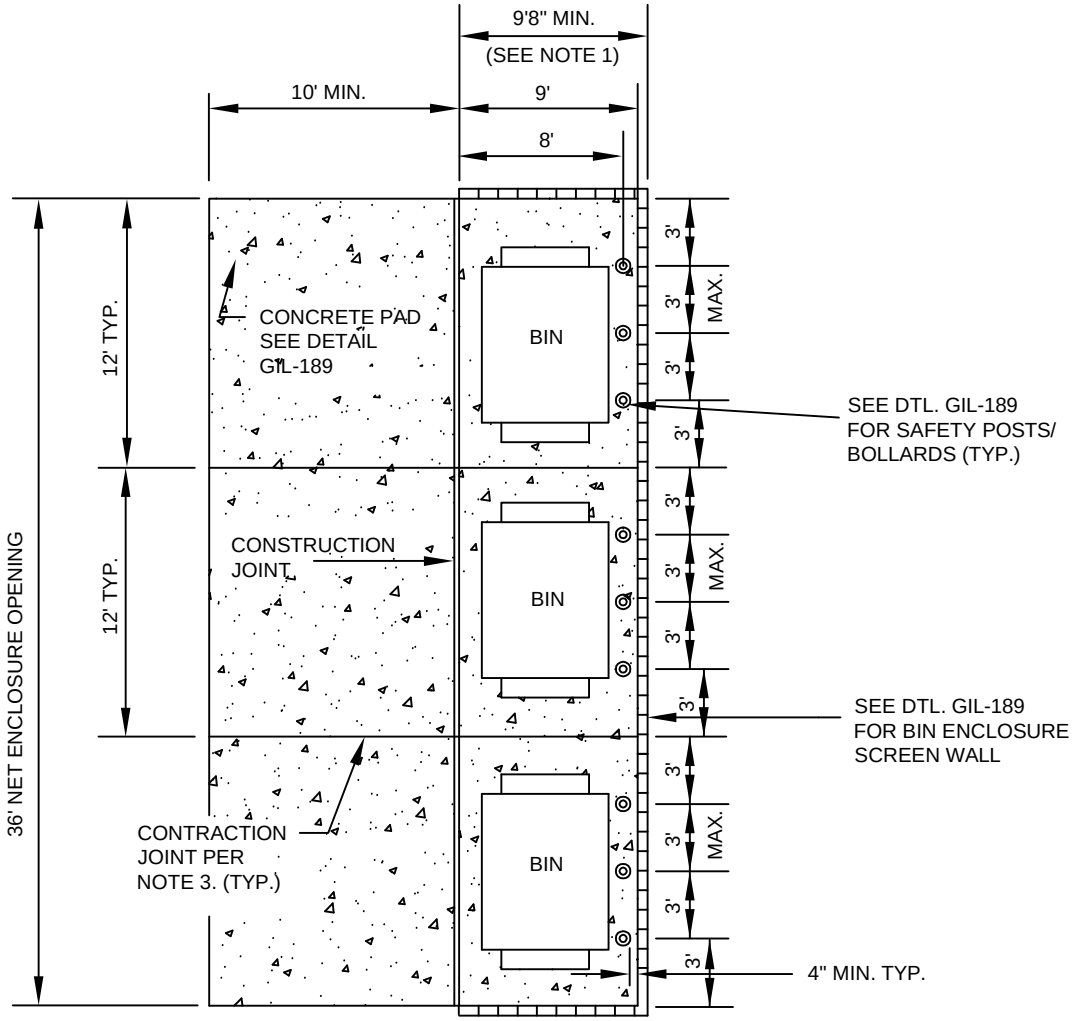

TRIPLE-WIDE BIN ENCLOSURE

N.T.S.

GILBERT ARIZONA	STANDARD DETAIL	TRIPLE-WIDE BIN ENCLOSURE	APPROVED TOWN ENGINEER DATE	DETAIL NO. GIL-182

NOTES:

1. WHERE CONECTIONS TO THE SANITARY SEWER ARE PROVIDED, THE DRAINAGE SYSTEM SHALL BE CONNECTED TO A GREASE INTERCEPTOR.

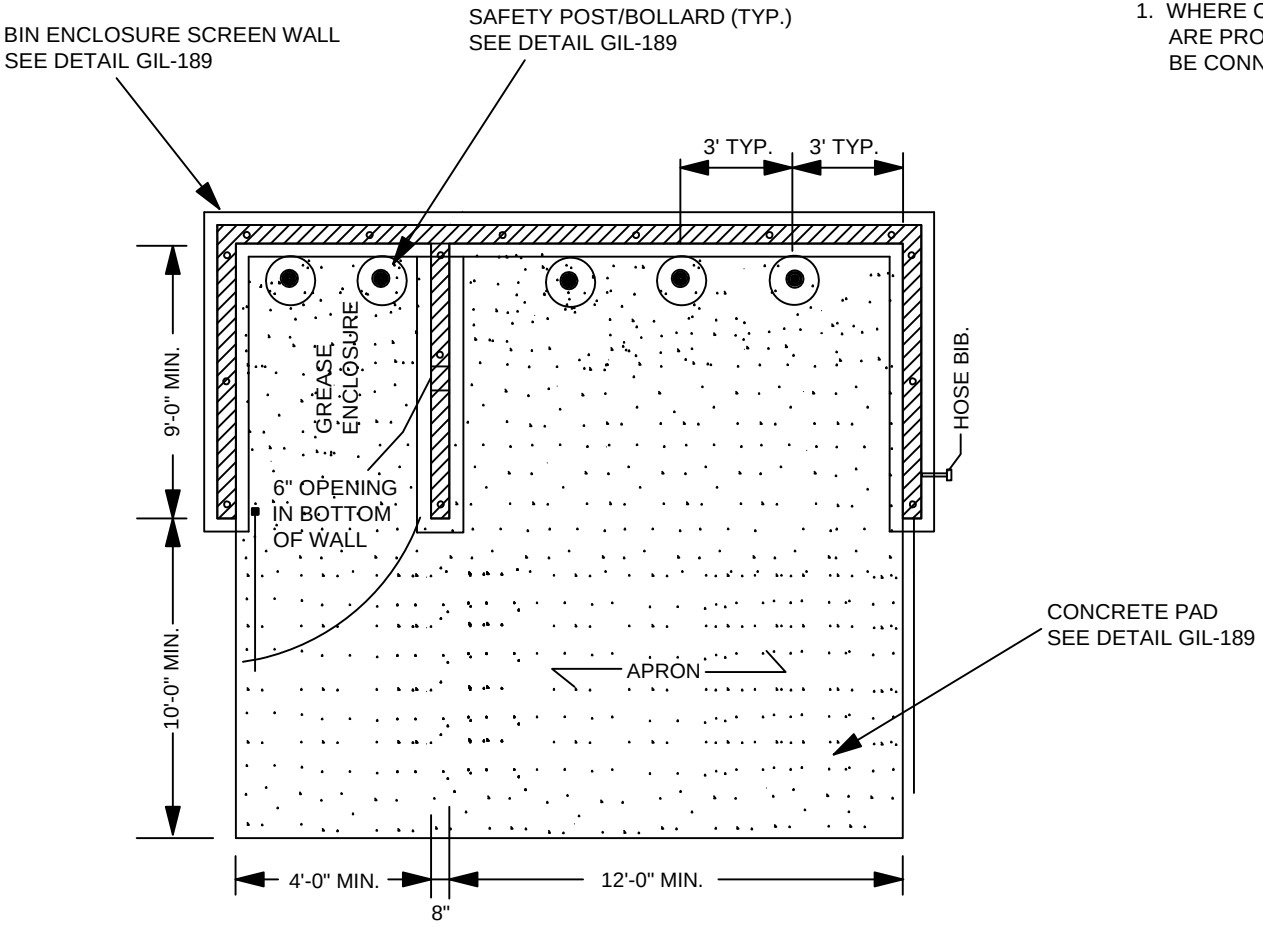

ENCLOSURE WITH GREASE TRAP.

GILBERT ARIZONA	STANDARD DETAIL	RESTAURANT ENCLOSURE WITH GREASE TRAP	APPROVED TOWN ENGINEER DATE	DETAIL NO. GIL-183

NOTES:

1. WHERE A COMPACTOR INSTALLATION PRODUCES LIQUID WASTE DRAINAGE, A RECEPTOR CONNECTED TO THE SANITARY SEWER SHALL BE PROVIDED. THE DRAINAGE PIPING SHALL BE CONNECTED TO A GREASE INTERCEPTOR.

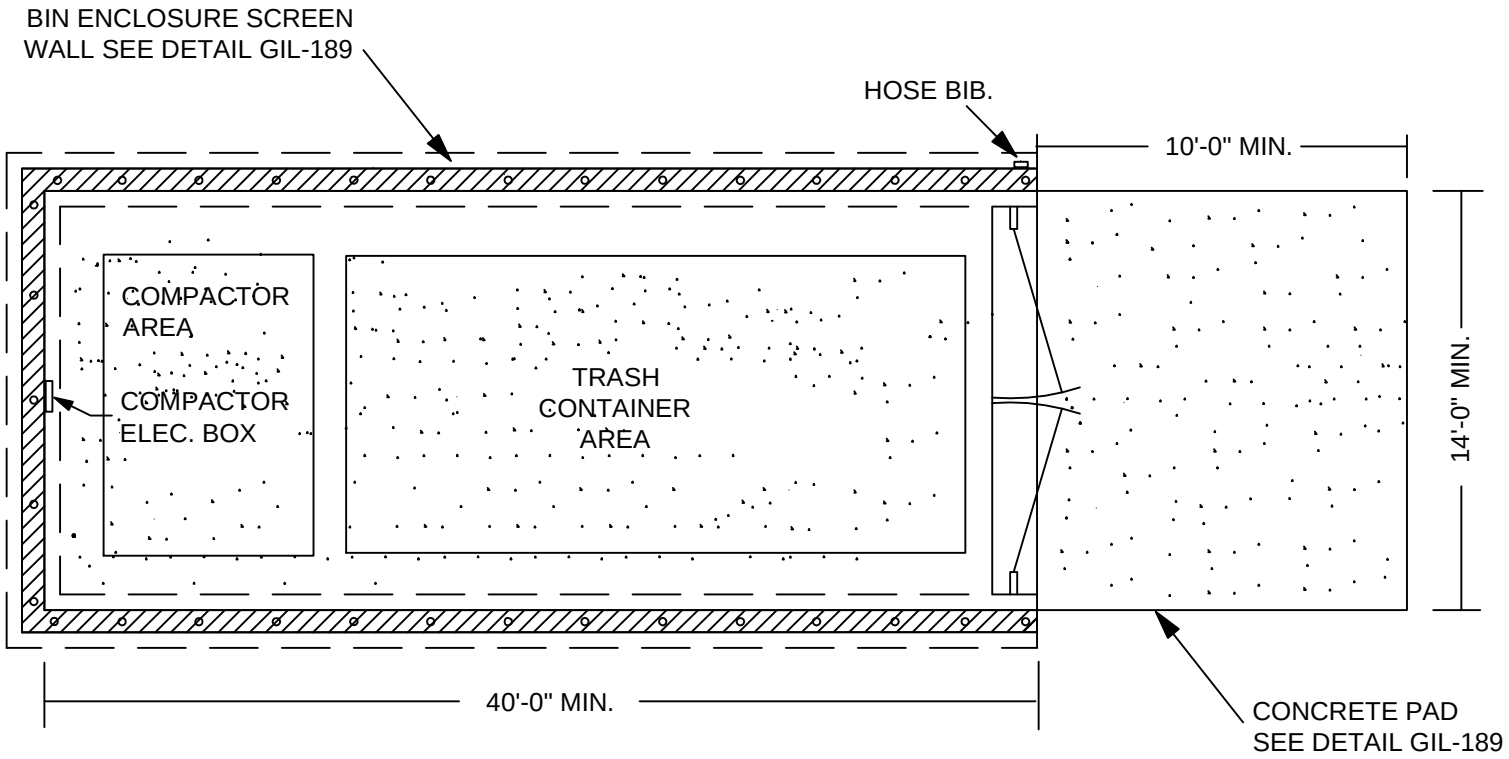

GILBERT ARIZONA	STANDARD DETAIL	LARGE COMPACTOR REFUSE AREA	APPROVED TOWN ENGINEER DATE	DETAIL NO. GIL-184

1. BIN ENCLOSURE TO BE A MINIMUM OF 5 FEET FROM ANY PLANNED OR EXISTING STRUCTURE AT ITS CLOSEST POINT

2. BINS THAT ARE VISIBLE FROM A PUBLIC ROADWAY SHALL HAVE ENCLOSURE GATES THAT SCREEN THE BINS FROM PUBLIC VIEW.

3. GATES SHALL BE INSTALLED SO THERE IS A NET BIN ENCLOSURE OPENING OF 12 FEET PER BIN. GATES, HINGES AND MOUNTING HARDWARE SHALL NOT INTRUDE UPON MINIMUM NE ENCLOSURE OPENING.

4. GATES, HINGES AND MOUNTING HARDWARE SHALL BE INSTALLED SO THERE IS A MINIMUM 9 FOOT DEPTH CREATED WITHIN EACH ENCLOSURE.

5. EACH ENCLOSURE GATE SHALL HAVE DROP PINS INSTALLED AND HOLES DRILLED IN THE CONCRETE AT BOTH THE OPEN AND CLOSED POSITIONS TO PREVENT GATES FROM CLOSING INTO THE COLLECTION VEHICLE.

6. BIN ENCLOSURES SHALL HAVE (3) 6" DIAMETER STEEL SAFETY POSTS INSTALLED IN THE BACK OF THE ENCLOSURE ONLY PER DETAIL ON THIS SHEET.

7. SAFETY POSTS SHALL HAVE A HEIGHT OF 6 FEET OR BE EQUAL TO THE HEIGHT OF THE BACK SCREEN WALL OF THE ENCLOSURE. SAFETY POSTS SHALL BE PLACED A MINIMUM OF 4" FROM THE WALL.

8. USE CLASS "A" CONCRETE AS PER MAG SECTION 725 EXCEPT AS NOTED IN SAFETY POST DETAIL ON THIS SHEET.

9. STEEL REINFORCEMENT SHALL BE GRADE 40.

10. EXPANSION JOINT FILLER SHALL BE ½" BITUMINOUS TYPE PREFORMED EXPANSION JOINT FILLER ASTM D-1751.

11. EXTERIOR FINISH OF SCREEN WALLS SHALL BE COORDINATED ARCHITECTURALLY WITH PRIMARY BUILDING FINISHES.

12. SOIL BELOW THE WALL FOOTER AND CONCRETE PAD SHALL BE COMPACTED TO A DEPTH OF 6 INCHES AND TO A MINIMUM DRY DENSIT OF 90% IN ACCORDANCE WITH ASTM D-2922 AND D-3017, AFTER ADJUSTMENT FOR ROCK CORRECTION.

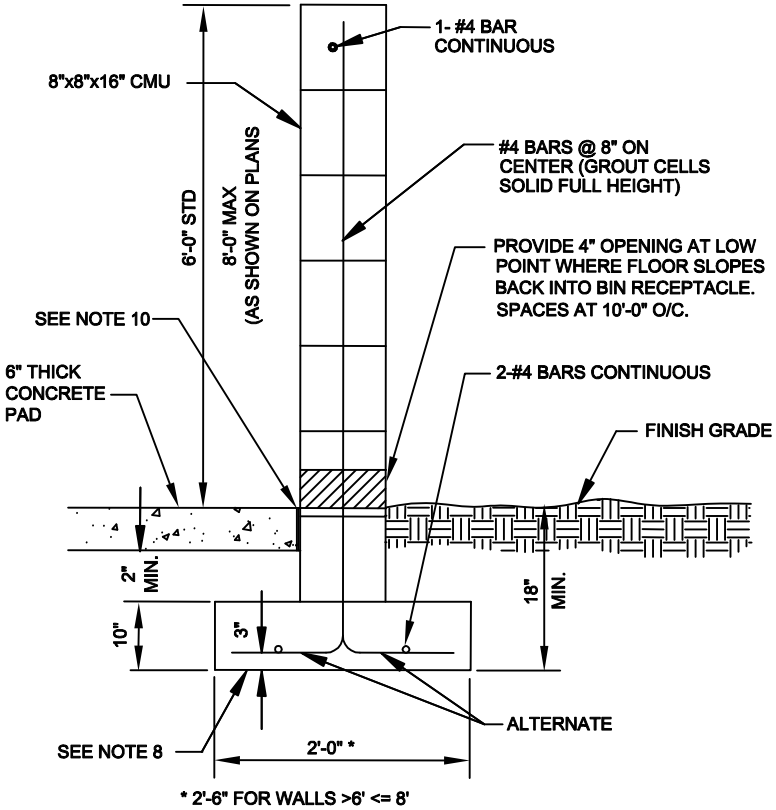

BIN ENCLOSURE SCREEN WALL

N.T.S.

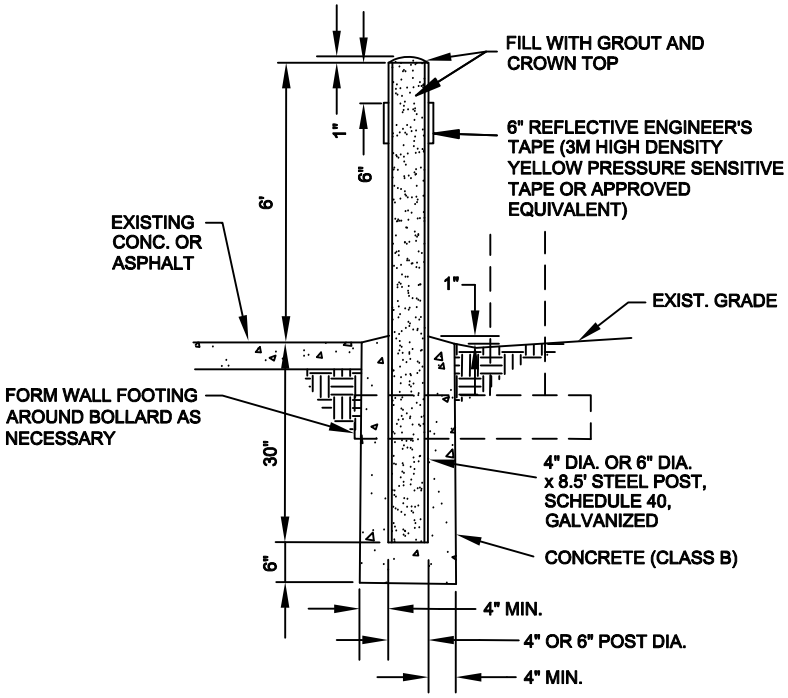

SAFETY POST/BOLLARD

N.T.S.

GILBERT ARIZONA	STANDARD DETAIL	BIN ENCLOSURE SCREEN WALL, SAFETY POST & GATE STANDARDS	APPROVED TOWN ENGINEER DATE	DETAIL NO. GIL-189

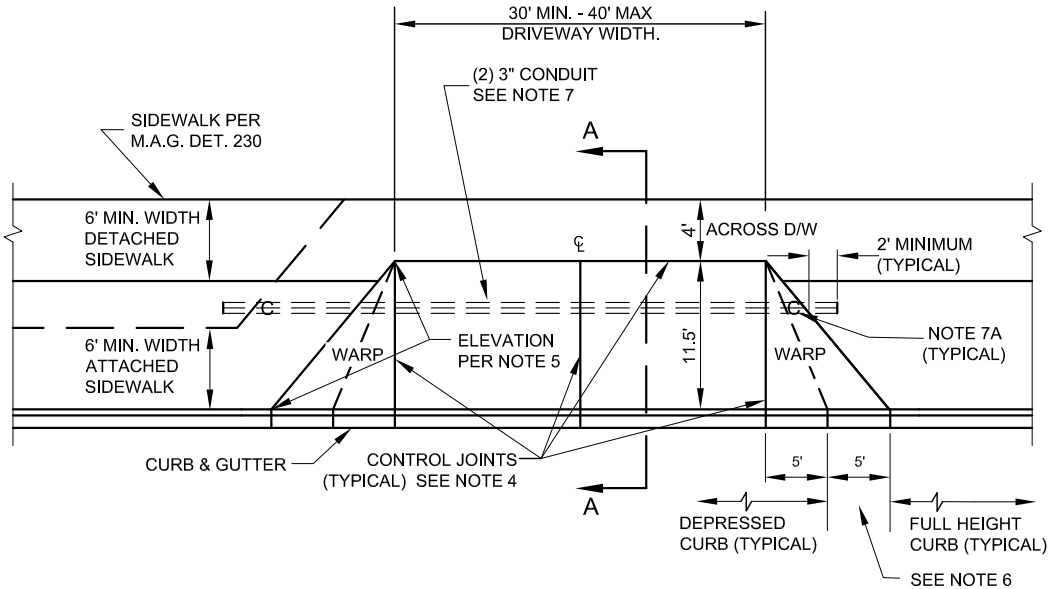

PLAN - DETAIL

NOT TO SCALE

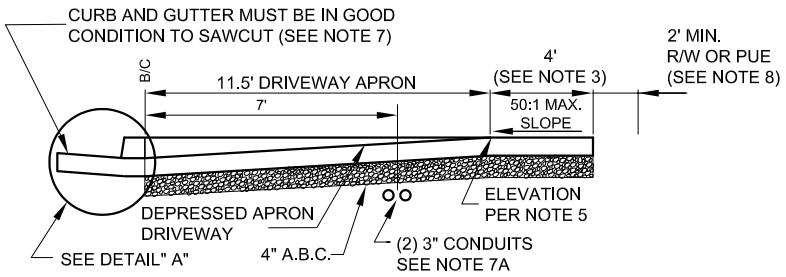

SECTION "A"-"A"

NOT TO SCALE

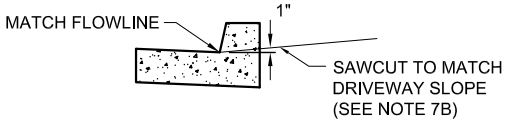

DETAIL "A"

NOT TO SCALE

NOTES:

1. EXPANSION JOINTS SHALL BE CONSTRUCTED AT EACH SIDE OF DRIVEWAY DEPRESSION AT POINTS OF CURVATURE AND AT ALL RIGID STRUCTURES.

2. ALL CONCRETE SHALL BE CLASS 'A' AS PER M.A.G. SECTION 725.

3. ALL COMMERCIAL DRIVEWAYS, ALLEY ENTRANCES AND SIDEWALKS BEHIND DRIVEWAYS SHALL BE 6" THICK ON 4" A.B.C. OR 8" THICK ON COMPACTED NATIVE SOIL. SIDEWALK WIDTH AT BACK OF DRIVEWAY SHALL BE 4 FEET.

4. ALL COMMERCIAL DRIVEWAYS HAVE CONTROL JOINTS AT THE DRIVEWAY CENTER LINE, AT BREAK BETWEEN SIDEWALK AND DRIVEWAY WINGS AND FROM BACK CORNER OF APRON TO LIP OF GUTTER. THE CONTROL JOINTS MAY BE EITHER SCORED OR SAWCUT 1 INCH DEEP.

5. FINISH GRADE ELEVATION AT THE APRON CORNER/SIDEWALK SHALL EQUAL THE TOP OF CURB ELEVATION UNLESS OTHERWISE APPROVED BY THE TOWN ENGINEER.

6. FINISH CURB ELEVATION SHALL TRANSITION UNIFORMLY FROM FULL HEIGHT CURB ELEVATION TO DEPRESSED CURB ELEVATION.

7. WHEN INSTALLING A DRIVEWAY IN EXISTING SIDEWALK AND/OR CURB, THE FOLLOWING NOTES APPLY:

   A. INSTALL (2) 3" SCHEDULE 40 P.V.C. CONDUITS AT 7' BACK OF CURB, MINIMUM 24" BELOW FINAL GRADE AND EXTEND 2' MINIMUM BEYOND EDGE OF DRIVEWAY FOR POSSIBLE FUTURE LANDSCAPE OR STREET LIGHT INSTALLATION. INSTALL PLUGS IN BOTH ENDS OF CONDUITS. STAMP 3" LETTER "C" IN CONCRETE FOR CONDUIT MARKER.

   B. REMOVE CURB PORTION ONLY WHEN CONSTRUCTING NEW DEPRESSION IN EXISTING CURB & GUTTER. EXISTING CURB SHALL BE REMOVED BY SAWCUTTING CURB HORIZONTALLY AS SHOWN IN DETAIL 'A', ONLY AS APPROVED BY THE TOWN ENGINEER. DAMAGED GUTTER SHALL BE REMOVED AND REPLACED WHERE DIRECTED BY THE TOWN ENGINEER.

   C. SIDEWALK SHALL BE SAWCUT TO FULL DEPTH OR REMOVED TO NEXT EXPANSION JOINT.

8. THE BACK OF R/W OR P.U.E. SHALL EXTEND 2' MINIMUM BEYOND THE BACK OF SIDEWALK ALONG THE BACK OF THE DRIVEWAY, UNLESS OTHERWISE APPROVED BY THE TOWN ENGINEER.

9. A DOUBLE DRIVEWAY WITH A RAISED MEDIAN IS REQUIRED AT DRIVEWAYS OVER 40 FEET IN WIDTH.

10. FOR ACCEPTABLE DRIVEWAY GRADE BREAKS USE A.D.O.T. DRAWING C-06.10.

GILBERT ARIZONA	STANDARD DETAIL	MINOR COMMERCIAL DRIVEWAY	APPROVED TOWN ENGINEER / DATE	DETAIL NO. GIL-210

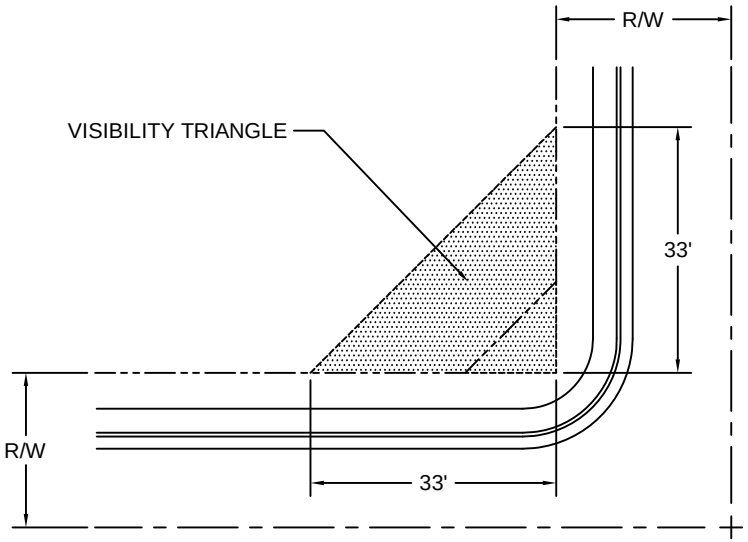

GROUND COVER AND FLOWERS LESS THAN 24 INCHES (MATURE) IN HEIGHT, GRANITE, AND TREES TRIMMED TO MINIMUM OF 7 FEET ABOVE GROUND ALLOWED IN THIS AREA.

GILBERT ARIZONA	STANDARD DETAIL	SIGHT DISTANCE AT UNCONTROLLED INTERSECTIONS	APPROVED TOWN ENGINEER DATE	DETAIL NO. GIL-211

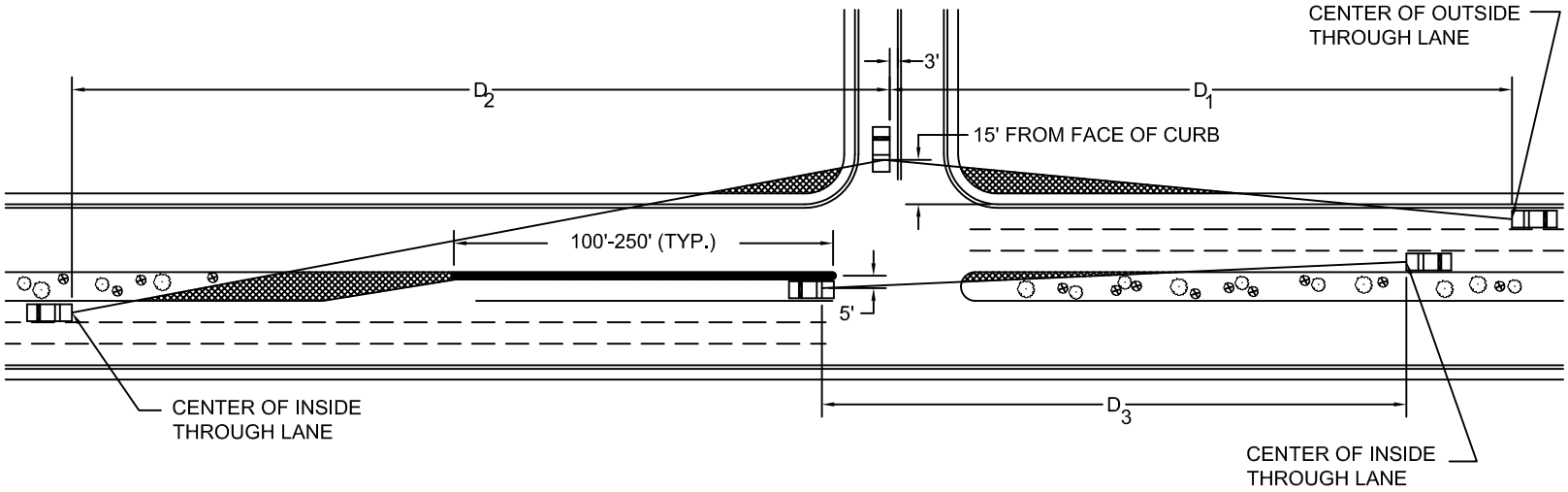

GROUND COVER AND FLOWERS LESS THAN 24 INCHES (MATURE) IN HEIGHT AND TREES TRIMMED TO MINIMUM OF 7 FEET ABOVE GROUND ALLOWED IN THIS AREA.

NO PLANTS OF ANY KIND, BOULDERS, OR STRUCTURES ALLOWED IN THIS AREA. DECORATIVE CONCRETE PREFERRED.

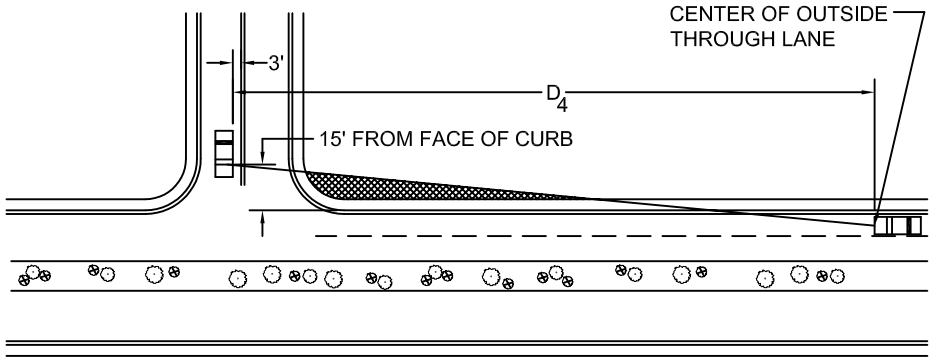

MAIN STREET	POSTED SPEED LIMIT ON MAIN STREET	D_1	D_2	D_3	D_4
LOCAL	25	310'	355'	245'	290'
COLLECTOR	25	310'	355'	245'	290'
	30	365'	415'	285'	335'
	35	415'	475'	325'	385'
MINOR ARTERIAL	45	590'	625'	445'	480'
MAJOR ARTERIAL	45	665'	665'	480'	480'

NOTE: DETAIL PERTAINS TO ALL CONTROLLED INTERSECTIONS AND COMMERCIAL/SHOPPING CENTER DRIVEWAYS ON ALL CLASSIFICATIONS OF ROADWAYS.

GILBERT ARIZONA	STANDARD DETAIL	SIGHT DISTANCE AT CONTROLLED INTERSECTIONS	APPROVED TOWN ENGINEER DATE	DETAIL NO. GIL-212

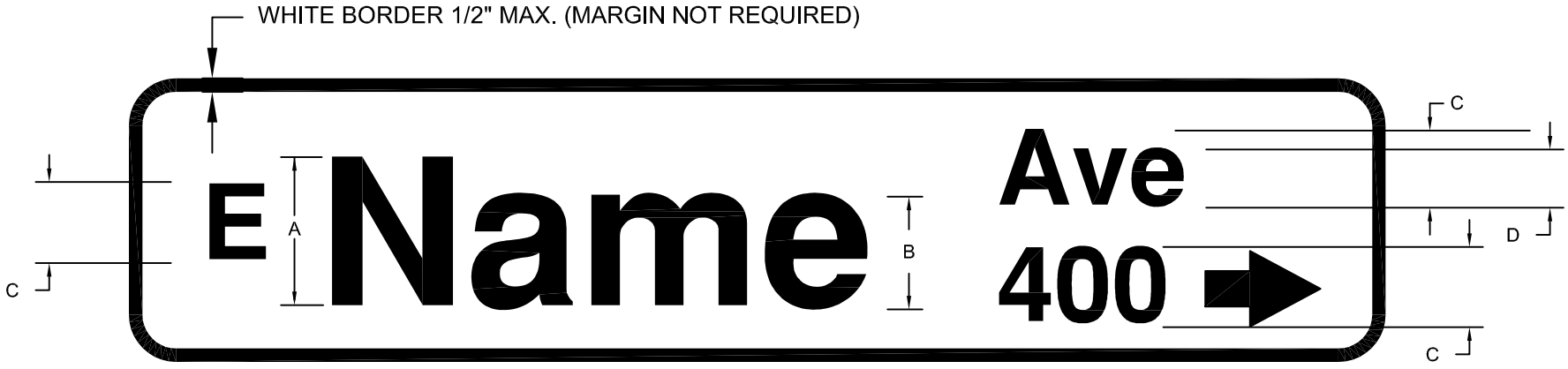

LAYOUT ONLY, SEE BELOW FOR LETTER STYLE.

1. LENGTH: DEPENDS ON LENGTH OF STREET NAME.
2. METAL: 6" FLAT, .125 GAUGE, 6061-T6 OR 5052-H3B ALLOY SHEET ALUMINUM.
3. REFLECTIVE SHEETING: COPY AND BACKGROUND SHALL BE 3-M DG³ OR EQUIVALENT. MATCH COMPONENT SYSTEM.
4. LETTERS, NUMBERS, ETC. TO BE PRESSURE SENSITIVE ACRYLIC EC FILM.
5. LETTERS, NUMBERS AND SPACING SHALL BE PER U.S. DEPARTMENT OF TRANSPORTATION STANDARD ALPHABETS FOR HIGHWAY SIGNS AND PAVEMENT MARKINGS SERIES B.
6. COLOR: TO BE PER LATEST ADOT STANDARDS WITH THE BACKGROUND GREEN AND THE COPY (BORDER AND LEGEND) WHITE WITH THE EXCEPTION OF PRIVATE STREETS WHICH SHALL HAVE A BLUE BACKGROUND.
7. SIGN PANELS SHALL BE FREE OF BUCKLES, WARPS, DENTS, COCKLES, BURPS AND DEFECTS RESULTING FROM FABRICATIONS AND SHIPPING.
8. PRESSURE SENSITIVE COPY MUST PROVIDE MINIMUM 10 YEAR DURABILITY WITH PREMATURE FAILURE DUE TO NATURAL WEATHERING OR SIGN TO BE REPLACED BY VENDOR AT NO CHARGE TO THE TOWN OF GILBERT. FAILURE IS INTERPRETED TO BE CRACKING OR PEELING OF BACKGROUND OR LEGEND FROM NORMAL WEATHERING.
9. THE SIGN MANUFACTURER SHALL SUBMIT A NOTARIZED CERTIFICATION OF COMPLIANCE TO THE TOWN OF GILBERT STATING THAT THE MANUFACTURE PROCEDURE AND THE MATERIALS FURNISHED CONFORM TO THE REQUIREMENTS OF THE PROVISIONS.
10. DIMENSIONS (INCHES)

WHEN APPROACHED ON A:	A	B	C	D
ARTERIAL	8	6	3	2.25
COLLECTOR	6	4.5	3	2.25
LOCAL	4	3	2	1.5

GILBERT ARIZONA	STANDARD DETAIL	STREET SIGN	APPROVED TOWN ENGINEER DATE	DETAIL NO. GIL-220

LAYOUT ONLY, SEE BELOW FOR LETTER STYLE.

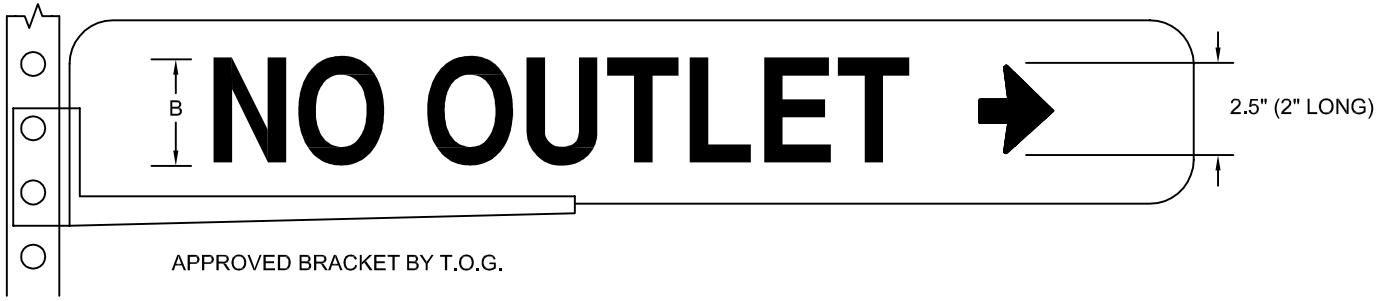

APPROVED BRACKET BY T.O.G.

1. LENGTH: TO ACCOMMODATE TEXT AND ARROW PER NOTE 10.

2. METAL: .125 GAUGE, 6061-T6 OR 5052-H3B ALLOY SHEET ALUMINUM.

3. REFLECTIVE SHEETING: COPY AND BACKGROUND SHALL BE 3-M DG³ OR EQUIVALENT. MATCH COMPONENT SYSTEM.

4. LETTERS, NUMBERS, ETC. TO BE PRESSURE SENSITIVE ACRYLIC EC FILM. TEXT OF "DEAD END" OR "NO OUTLET" PER TOWN TRAFFIC ENGINEER.

5. LETTERS, NUMBERS AND SPACING SHALL BE PER U.S. DEPARTMENT OF TRANSPORTATION STANDARD ALPHABETS FOR HIGHWAY SIGNS AND PAVEMENT MARKINGS SERIES B.

6. COLOR: TO BE PER LATEST ADOT STANDARDS WITH THE BACKGROUND YELLOW AND THE COPY (LEGEND) BLACK.

7. SIGN PANELS SHALL BE FREE OF BUCKLES, WARPS, DENTS, COCKLES, BURPS AND DEFECTS RESULTING FROM FABRICATIONS AND SHIPPING.

8. PRESSURE SENSITIVE COPY MUST PROVIDE MINIMUM 10 YEAR DURABILITY WITH PREMATURE FAILURE DUE TO NATURAL WEATHERING OR SIGN TO BE REPLACED BY VENDOR AT NO CHARGE TO THE TOWN OF GILBERT. FAILURE IS INTERPRETED TO BE CRACKING OR PEELING OF BACKGROUND OR LEGEND FROM NORMAL WEATHERING.

9. THE SIGN MANUFACTURER SHALL SUBMIT A NOTARIZED CERTIFICATION OF COMPLIANCE TO THE TOWN OF GILBERT STATING THAT THE MANUFACTURE PROCEDURE AND THE MATERIALS FURNISHED CONFORM TO THE REQUIREMENTS OF THE PROVISIONS.

10. DIMENSIONS (INCHES)

WHEN APPROACHED ON A:	A	B
ARTERIAL	8	6
COLLECTOR/LOCAL	6	4

GILBERT ARIZONA	STANDARD DETAIL	STREET SIGN WITH DEAD END OR NO OUTLET	APPROVED TOWN ENGINEER ____ DATE ____	DETAIL NO. GIL-221

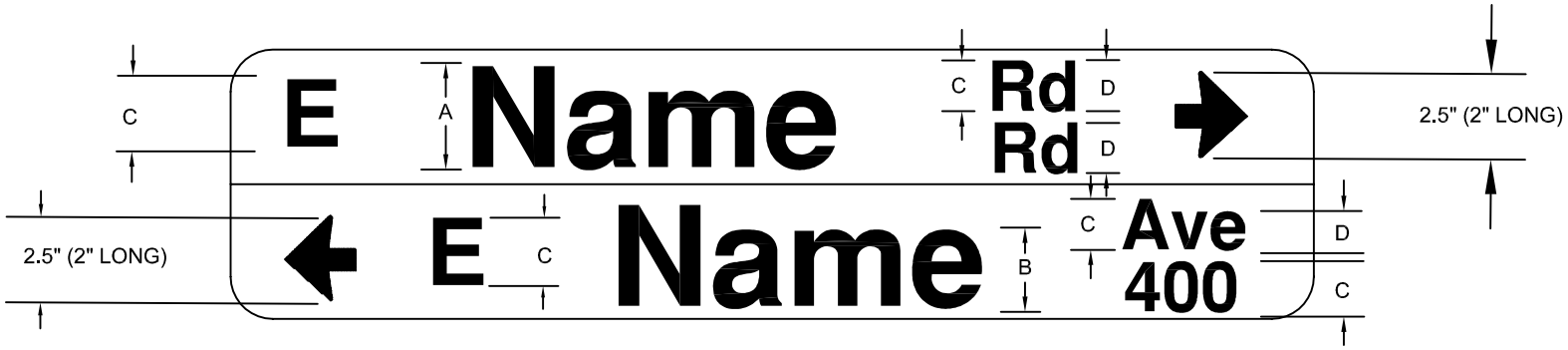

LAYOUT ONLY, SEE BELOW FOR LETTER STYLE

1. LENGTH: DEPENDS ON LENGTH OF STREET NAME (LEGEND).

2. METAL: 6" FLAT, .125 GAUGE, 6061-T6 OR 5052-H3B ALLOY SHEET ALUMINUM.

3. REFLECTIVE SHEETING: COPY AND BACKGROUND SHALL BE 3-M DG³ OR EQUIVALENT. MATCH COMPONENT SYSTEM.

4. LETTERS, NUMBERS, ETC. TO BE PRESSURE SENSITIVE ACRYLIC EC FILM.

5. LETTERS, NUMBERS AND SPACING SHALL BE PER U.S. DEPARTMENT OF TRANSPORTATION STANDARD ALPHABETS FOR HIGHWAY SIGNS AND PAVEMENT MARKINGS SERIES B.

6. COLOR: TO BE PER LATEST ADOT STANDARDS WITH THE BACKGROUND GREEN AND THE COPY (BORDER AND LEGEND) WHITE WITH THE EXCEPTION OF PRIVATE STREETS WHICH SHALL HAVE A BLUE BACKGROUND.

7. SIGN PANELS SHALL BE FREE OF BUCKLES, WARPS, DENTS, COCKLES, BURPS AND DEFECTS RESULTING FROM FABRICATIONS AND SHIPPING.

8. PRESSURE SENSITIVE COPY MUST PROVIDE MINIMUM 10 YEAR DURABILITY WITH PREMATURE FAILURE DUE TO NATURAL WEATHERING OR SIGN TO BE REPLACED BY VENDOR AT NO CHARGE TO THE TOWN OF GILBERT. FAILURE IS INTERPRETED TO BE CRACKING OR PEELING OF BACKGROUND OR LEGEND FROM NORMAL WEATHERING.

9. THE SIGN MANUFACTURER SHALL SUBMIT A NOTARIZED CERTIFICATION OF COMPLIANCE TO THE TOWN OF GILBERT STATING THAT THE MANUFACTURE PROCEDURE AND THE MATERIALS FURNISHED CONFORM TO THE REQUIREMENTS OF THE PROVISIONS.

10. DIMENSIONS (INCHES)

WHEN APPROACHED ON A:	A	B	C	D
ARTERIAL	8	6	3	2.25
COLLECTOR	6	4.5	3	2.25
LOCAL	4	3	2	1.5

GILBERT ARIZONA	STANDARD DETAIL	STREET SIGN STREET NAME CHANGE AT INTERSECTION	APPROVED TOWN ENGINEER DATE	DETAIL NO. GIL-223

DETAIL #1

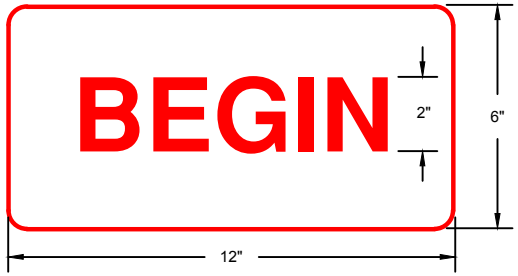

DETAIL #2

DETAIL #3

NOTES:

FIRE LANE NO PARKING SIGNS SHALL BE INSTALLED AS FOLLOWS:

- ONE AT THE BEGINNING OF THE RESTRICTION. (DETAIL #1) WITH (DETAIL #2)

- ONE SPACED EVENLY EVERY ONE HUNDRED (100) FEET WITHIN THE RESTRICTED AREA (DETAIL #1). SOME AREAS MAY REQUIRE REDUCED SIGN SPACING AT THE DISCRETION OF THE FIRE CODE OFFICIAL. IN CURVED CURBS/ZONES AND AREAS THAT PRESENT VISUAL OBSTACLES, SIGNS NEED TO BE VISIBLE FROM ANY POINT ALONG THE RESTRICTION.

- ONE AT THE END OF THE RESTRICTION. (DETAIL #1) WITH (DETAIL #3)

2" LETTERS ARE 5/8" WIDE.
1 1/2" LETTERS ARE 1/2" WIDE.
3/4" LETTERS ARE 1/8" WIDE.
ALL LETTERS ARE RED ON A WHITE REFLECTIVE BACKGROUND.

THE SIGNS ARE TO BE MOUNTED ON A POST AS PER TOG STANDARD DETAIL GIL-227.

THE BOTTOM OF THE SIGN IS TO BE 7' ABOVE GRADE.

THESE SIGNS ARE NOT SUPPLIED BY THE TOWN OF GILBERT.

GILBERT	STANDARD DETAIL	FIRE LANE SIGN DETAIL	APPROVED TOWN ENGINEER DATE	DETAIL NO. GIL-226

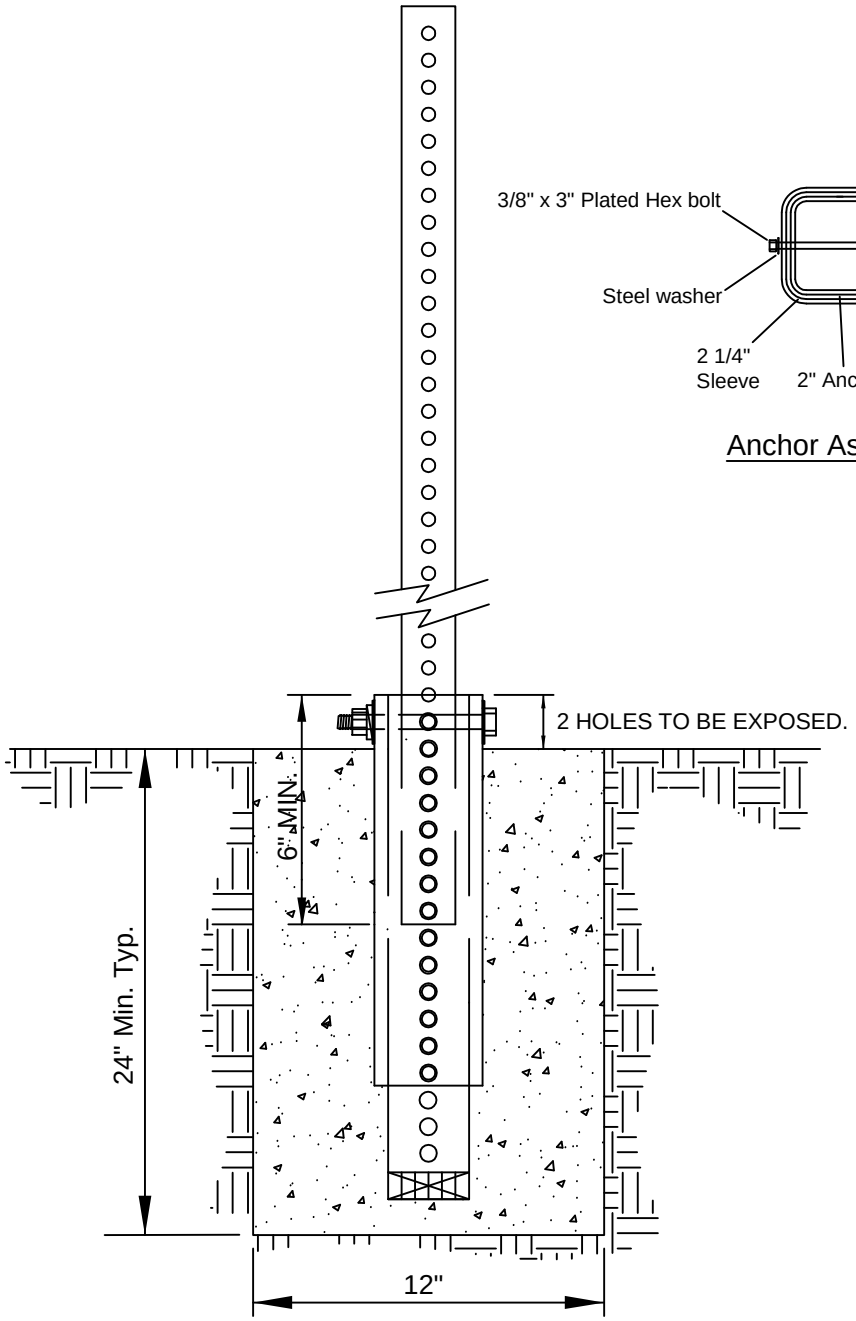

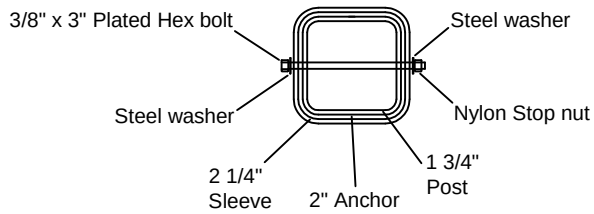

Anchor Assembly

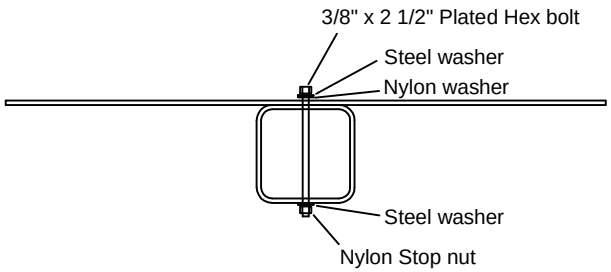

Sign Mounting

NOTES:

1. INSTALL ALL TRAFFIC SIGNS 36" x 36" (1296 SQ. IN.) OR LESS ON 12 GAUGE 1 3/4" SQUARE STEEL TUBING.

2. INSTALL ALL TRAFFIC SIGNS GREATER THAN 36" x 36" (1296 SQ. IN.) ON 12 GUAGE 2" SQUARE STEEL TUBING.

3. CONCRETE BASE 2' DEEP MIN. X 12" WIDE 18" LONG ANCHOR & 12" SLEEVE COMPLETELY TAPED TO PREVENT SEAPAGE OF CONCRETE.

4. POST ANCHOR SHALL HAVE 2 HOLES EXPOSED AT FINISHED GRADE.

5. ALL TRAFFIC SIGNS, WITH THE EXCEPTION OF R6-1 & DELINEATORS, SHALL BE SET AT A HEIGHT OF 7' TO BOTTOM OF SIGN. POSTS WITH DUAL SIGN ASSEMBLIES MAY BE SET AT 6' TO BOTTOM OF SIGN IF THE SECONDARY SIGN DOES NOT PROJECT MORE THAN 4" INTO THE SIDEWALK. DELINEATORS SHALL BE MOUNTED AT A MINIMUM OF 4' TO THE BOTTOM OF THE SIGN. ALTERNATIVE HEIGHTS MUST BE APPROVED BY THE TOWN TRAFFIC ENGINEER PRIOR TO INSTALLATION.

6. BOLT FOR BASE TO BE PERPENDICULAR TO THE FLOW OF TRAFFIC.

GILBERT ARIZONA	STANDARD DETAIL	SIGN POST AND BASE	APPROVED TOWN ENGINEER DATE	DETAIL NO. GIL-227

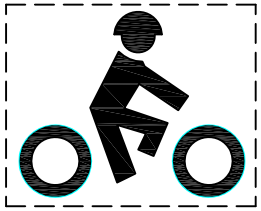

TRAIL

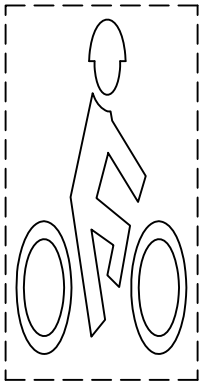

BIKE LANE

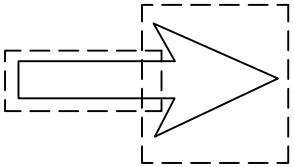

BIKE LANE ARROW

BIKE PAVEMENT MARKING STENCILS			
LEGEND OR IMAGE	IMAGE WIDTH & HEIGHT	STENCIL SIZE (SPRAY PAINT)	STENCIL SIZE (HOT PLASTIC)
STRAIGHT ARROW	72" X 21"		
BIKE TRAIL SYMBOL	52" X 42"	56" X 44"	60" X 48"
BIKE LANE SYMBOL	36" X 72"	44" X 86"	48" X 90"

GILBERT ARIZONA

STANDARD DETAIL

BIKE PAVEMENT MARKING STENCILS

APPROVED

TOWN ENGINEER

DATE

DETAIL NO.

GIL-231

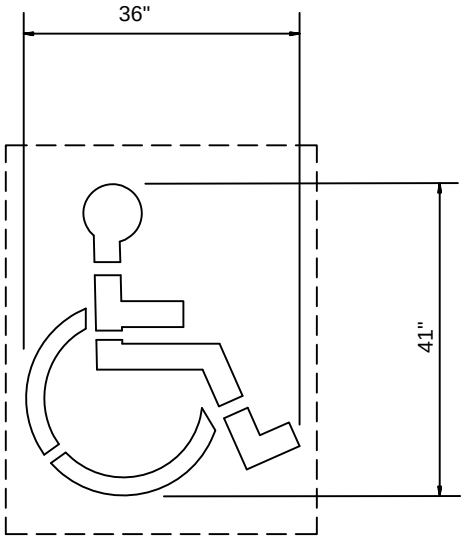

S-48HC
HANDICAP PARKING SYMBOL

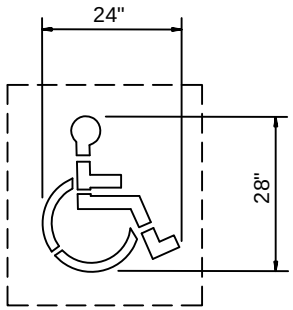

S-24HC
HANDICAP PARKING SYMBOL

PAVEMENT MARKING STENCILS				
NO.	IMAGE	IMAGE WIDTH & HEIGHT	STENCIL SIZE (SPRAY PAINT)	STENCIL SIZE (HOT PLASTIC)
S-48HC	HANDICAP PARKING SYMBOL	36" X 41"	44" X 56"	48" X 60"
S-24HC	HANDICAP PARKING SYMBOL	24" X 28"	26" X 30"	30" X 34"

GILBERT ARIZONA

STANDARD DETAIL

HANDICAP PARKING SYMBOLS

APPROVED

TOWN ENGINEER

DATE

DETAIL NO.
GIL-232

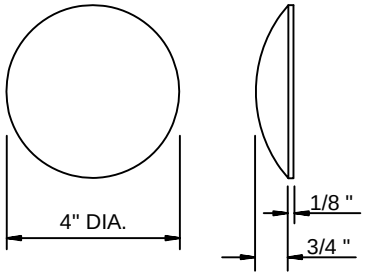

TYPE A & TYPE AY

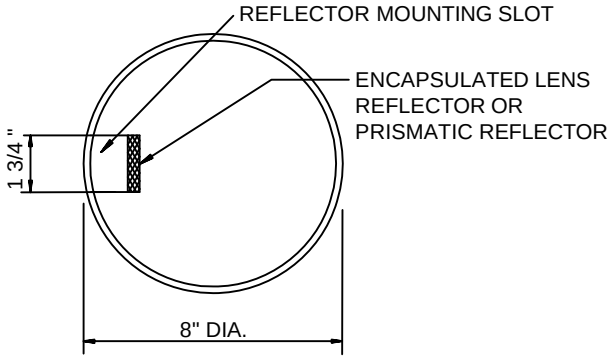

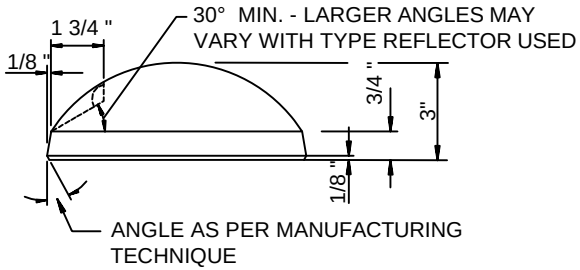

TYPE J & TYPE JY
DAGMAR

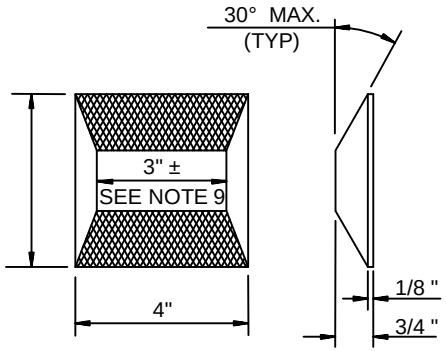

TYPE C, D, G & H
(TYPE G & H REFLOCTORIZED ON ONE SIDE ONLY)

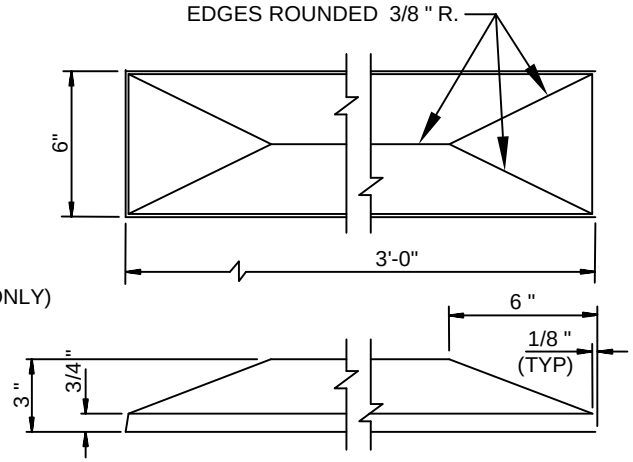

TYPE K & TYPE KY
JIGGLE BAR

NOTES:

1. TYPE A RAISED PAVEMENT MARKERS ARE WHITE AND NON-REFLECTIVE. TYPE AY RAISED PAVEMENT MARKERS ARE YELLOW AND NON-REFLECTIVE.
2. TYPE J DAGMARS ARE WHITE AND REFLECTORIZED. TYPE JY DAGMARS ARE YELLOW AND REFLECTORIZED. ENCAPSULATED LENS REFLECTORS SHALL BE USED FOR TYPE J AND JY DAGMARS. SUCH REFLECTORS SHALL NOT EXTEND BEYOND THE CROWN SURFACE.
3. TYPE A AND AY RAISED PAVEMENT MARKERS AND J AND JY DAGMARS CONSIST OF A HEAT-FIRED VITREOUS CERAMIC BASE AND A HEAT-FIRED, OPAQUE, GLAZED SURFACE.
4. THE FOLLOWING RAISED PAVEMENT MARKERS ARE REFLECTORIZED AND INTENDED FOR USE WITH TWO-WAY TRAFFIC:
   COLOR --- TYPE D - YELLOW BOTH SIDES
5. THE FOLLOWING RAISED PAVEMENT MARKERS ARE REFLECTORIZED AND INTENDED FOR USE WITH ONE-WAY TRAFFIC:
   COLOR
   TYPE C - WHITE ONE SIDE, RED ONE SIDE
   TYPE G - WHITE
   TYPE H - YELLOW
6. TYPE C, D, G AND H RAISED PAVEMENT MARKERS SHALL CONSIST OF A PLASTIC SHELL FILLED WITH A MIXTURE OF AN INERT THERMO SETTING COMPOUND AND FILLER MATERIALS. THE EXTERIOR SURFACE SHALL BE SMOOTH. THE SHELL SHALL CONTAIN ONE OR TWO PRISMASTIC REFLECTOR FACES, AS REQUIRED, OF THE COLOR SPECIFIED.
7. TYPE K JIGGLE BARS ARE WHITE AND REFLECTORIZED. TYPE KY JIGGLE BARS ARE YELLOW AND REFLECTORIZED. JIGGLE BARS MAY CONSIST OF A HEAT-FIRED VITREOUS CERAMIC BASE OR A CLASS B CONCRETE MIX FOR MINOR STRUCTURES. THE COLOR OF JIGGLE BARS SHALL BE ACCOMPLISHED BY PAINTING ALL UPPER SURFACES WITH TRAFFIC PAINT. REFLECTORIZATION SHALL BE ACCOMPLISHED BY DROPPING GLASS BEADS INTO THE WET TRAFFIC PAINT. TRAFFIC PAINT, GLASS BEADS AND METHODS OF APPLICATION SHALL BE PER MANUFACTURER'S RECOMMENDATION.
8. ALL DIMENSIONS ARE NOMINAL, EXCEPT AS OTHERWISE NOTED.
9. THE REFLECTORIZED RAISED PAVEMENT MARKER ILLUSTRATED IS THE SQUARE SHOULDER TYPE. THE ROUND SHOULDER TYPE IS AN ACCEPTABLE ALTERNATE.

GILBERT ARIZONA	STANDARD DETAIL	RAISED PAVEMENT MARKER DETAILS	APPROVED TOWN ENGINEER / DATE	DETAIL NO. GIL-233

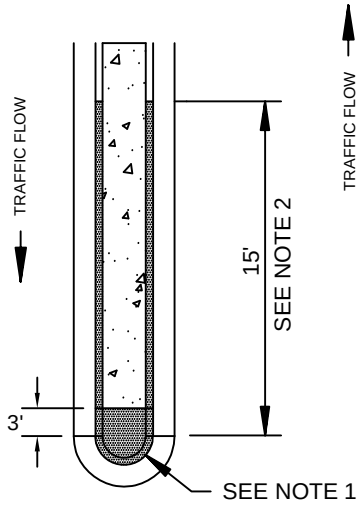

(FOR MEDIANS LESS THAN 6 FEET IN WIDTH)

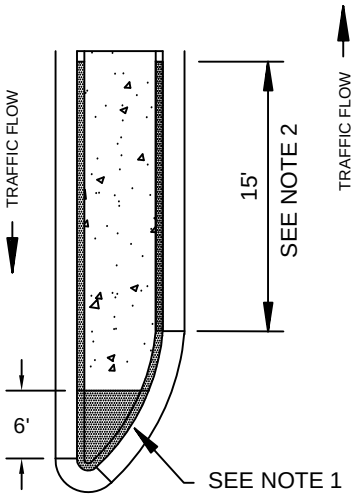

(FOR MEDIANS OVER 6 FEET IN WIDTH)

MEDIANS

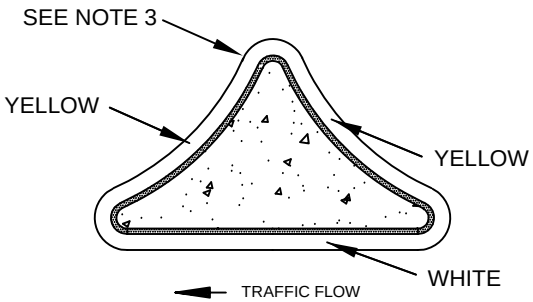

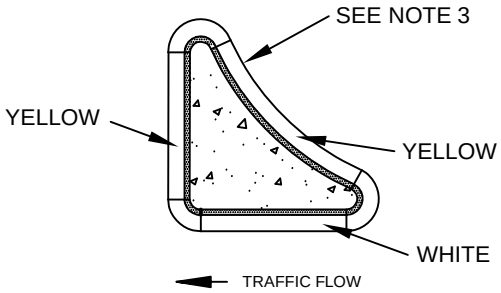

ISLANDS

NOTES:

1. PAINT TOP AND VERTICAL FACE OF CURB YELLOW AND INSIDE OF BULLNOSE (CONCRETE BULLNOSE ONLY). SEE MAG DETAIL 223.
2. PAINT TOP AND VERTICAL FACE OF CURB FOR THE DISTANCE SHOWN.
3. PAINT TOP AND VERTICAL FACE OF CURB ON ISLANDS AS SHOWN.

GILBERT ARIZONA	STANDARD DETAIL	CURB MARKINGS FOR RAISED MEDIANS AND MEDIAN ISLANDS	APPROVED TOWN ENGINEER DATE	DETAIL NO. GIL-240

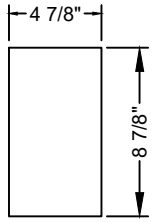

INDIVIDUAL OFFSET BRICK PATTERN

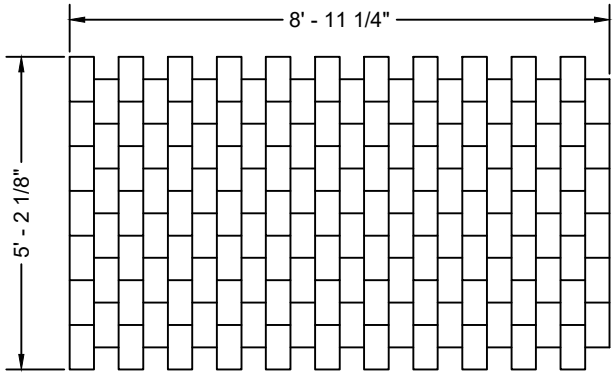

NOTE:
OFFSET BRICK TEMPLATE SHALL BE USED ON PAVED MEDIANS ONLY.

GILBERT ARIZONA	STANDARD DETAIL	ASPHALT STAMPING DETAIL OFFSET BRICK	APPROVED TOWN ENGINEER DATE	DETAIL NO. GIL-250

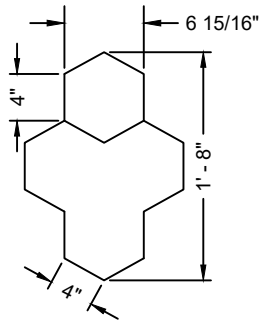

INDIVIDUAL TRI-HEX KEYSTONE PATTERN

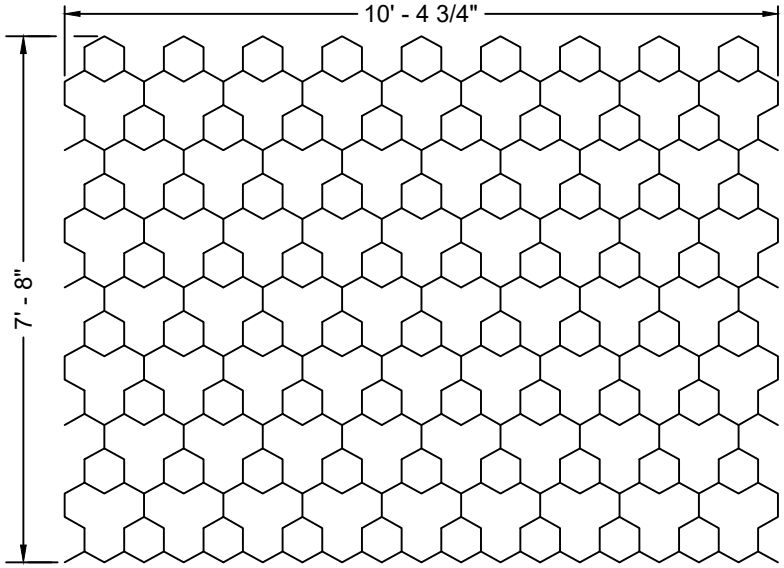

TRI-HEX KEYSTONE TEMPLATE

NOTE:
THE TRI-HEX KEYSTONE TEMPLATE SHALL BE USED IN DESIGNATED CROSSWALK ZONES ONLY.

GILBERT ARIZONA	STANDARD DETAIL	ASPHALT STAMPING DETAIL TRI-HEX KEYSTONE	APPROVED TOWN ENGINEER DATE	DETAIL NO. GIL-251

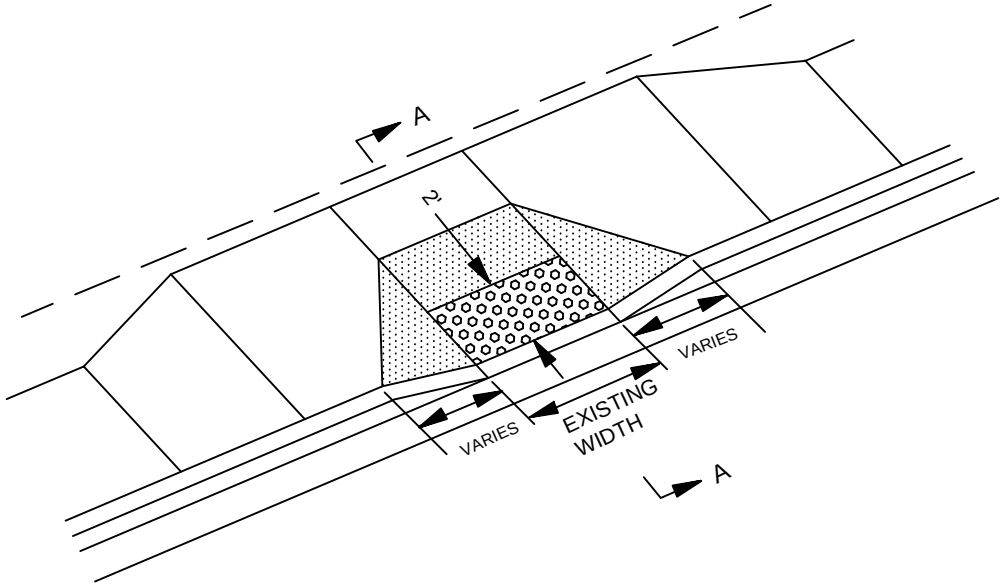

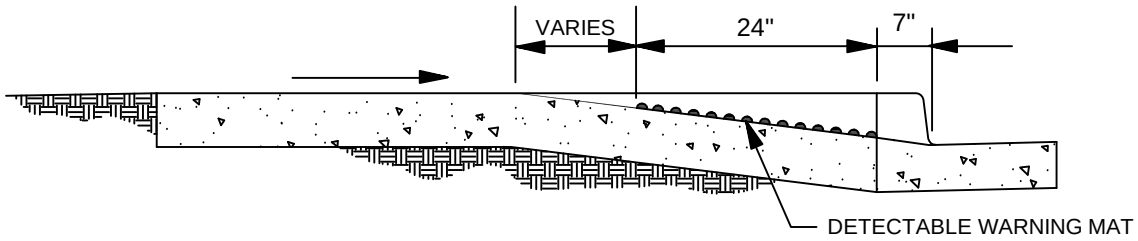

SECTION A - A

NOT TO SCALE

GILBERT ARIZONA	STANDARD DETAIL	DETECTABLE WARNING MAT EXISTING RAMPS	APPROVED TOWN ENGINEER DATE	DETAIL NO. GIL-260

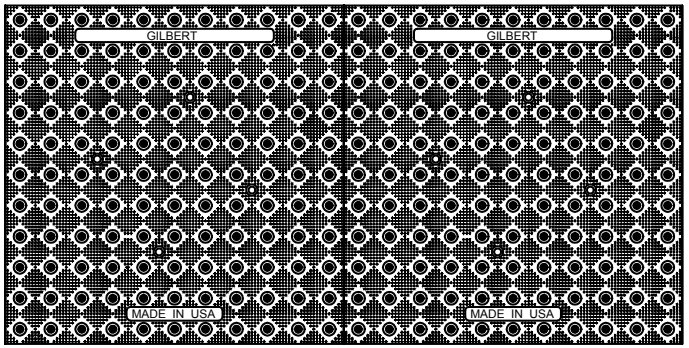

PLAN VIEW

NOTES:

1. GILBERT LETTERING MUST BE SHOWN ON EACH SECTION AS SHOWN IN THE DRAWINGS.
2. DETECTABLE WARNING PANELS SHALL CONSIST OF THE APPROPRIATE CAST IRON GRADE MANUFACTURED BY NEENAH FOUNDRY COMPANY OR AN APPROVED EQUAL "PATINA". APPLIED AS A WET SET APPLICATION. ALSO REFER TO MAG FOR BROOM FINISH AND SHALL CONFORM TO THE DETAILS IN THE PLANS AND IN ACCORDANCE WITH THE MANUFACTURER'S SPECIFICATIONS AND INSTALLATION INSTRUCTIONS.
3. INSTALLATION SHALL START AT BACK OF CURB 24" DEPTH, AND COVER COMPLETE WIDTH OF RAMP. DOMES SHALL BE ALIGNED IN DIRECTION OF TRAVEL TOWARD THE RAMP ON THE OPPOSITE SIDE OF STREET.
4. PLEASE CONTACT T.O.G. STREETS DEPARTMENT FOR ADDITIONAL QUESTIONS AT (480)503-6400.

NOT TO SCALE

GILBERT ARIZONA	STANDARD DETAIL	DETECTABLE WARNING PANEL DETAIL NEW RAMP	APPROVED TOWN ENGINEER DATE	DETAIL NO. GIL-261

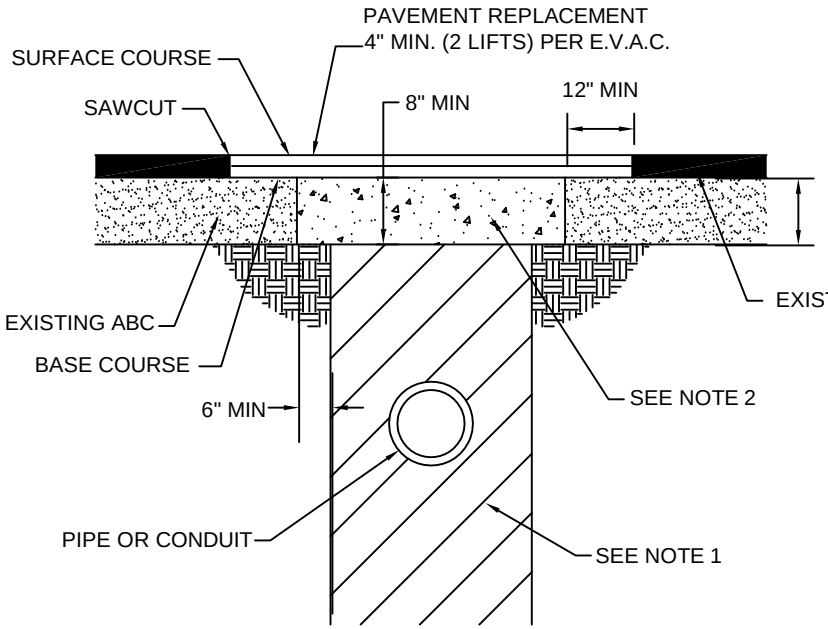

"T"-TOP

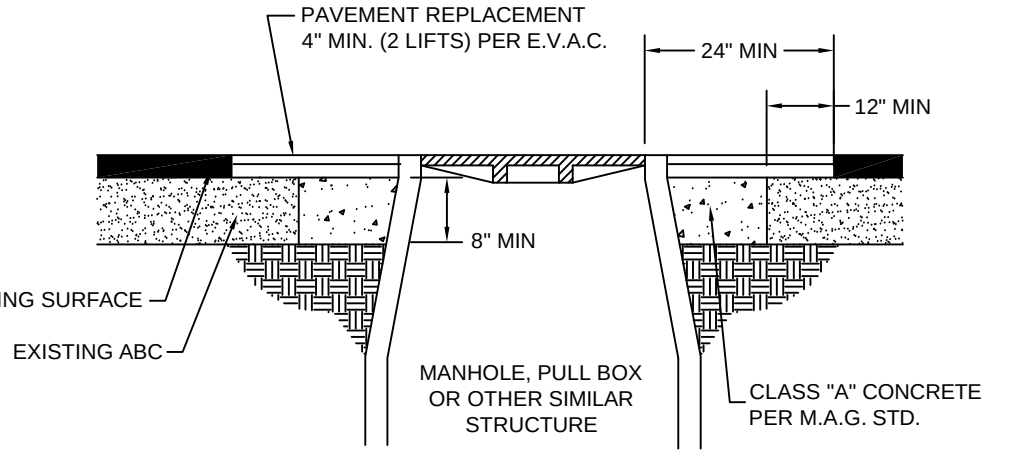

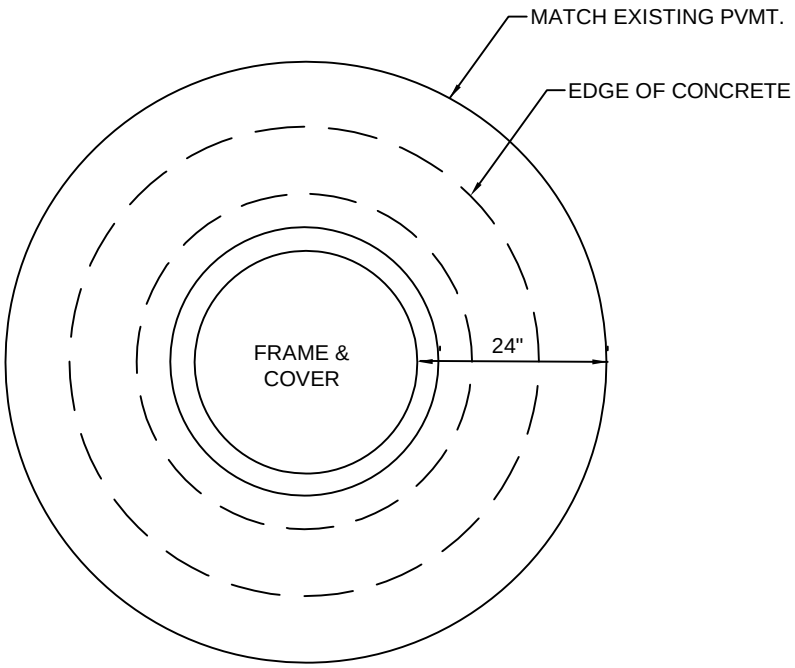

MANHOLE ADJUSTMENT

NOTES:

1. FULL DEPTH, HALF SACK CLSM SLURRY PER M.A.G SPEC. 604 AND 728
2. HALF SACK CLSM SLURRY PER M.A.G. STD. THICKNESS AND M.A.G. SPEC 604 AND 728 TO MATCH EXISTING A.B.C. OR 8" MINIMUM
3. FOR TRANSVERSE TRENCH ONLY.

E.V.A.C. DENOTES EAST VALLEY ASPHALT COMMITTEE

GILBERT ARIZONA	STANDARD DETAIL	BACKFILL, PAVEMENT & SURFACE REPLACEMENT	APPROVED TOWN ENGINEER DATE	DETAIL NO. GIL-270

NOTES:

1. THE CONTRACTOR SHALL PROVIDE ADEQUATE OVERLAP OF PLATE ON ASPHALT TO ASSURE NO SLIPPAGE OF PLATE AND NO COLLAPSING OF TRENCH.

2. "POSTED SPEED" DOES NOT INCLUDE TEMPORARY CONSTRUCTION SIGNING.

3. MINIMUM PLATE SIZE OF 4' X 4' X 1" CAN BE USED FOR EXCAVATIONS OF 2 FEET WIDE OR 2 SQUARE FEET. LARGER PLATES ARE REQUIRED FOR ANY EXCAVATION LARGER THAN THOSE LISTED ABOVE. PLATES SMALLER THAN 4' X 4' X 1" ARE NOT ALLOWED IN THE TOWN RIGHT OF WAY

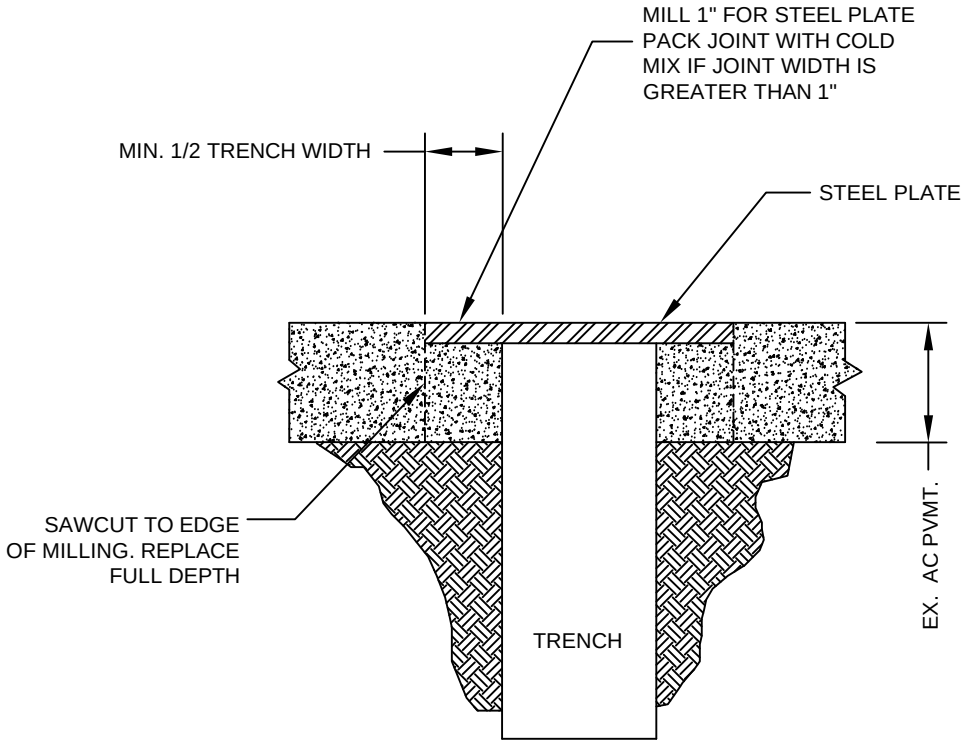

TYPE "A" PLATING
TOWN POSTED SPEEDS OF
30 MPH AND GREATER
OR BUS OR TRUCK ROUTES

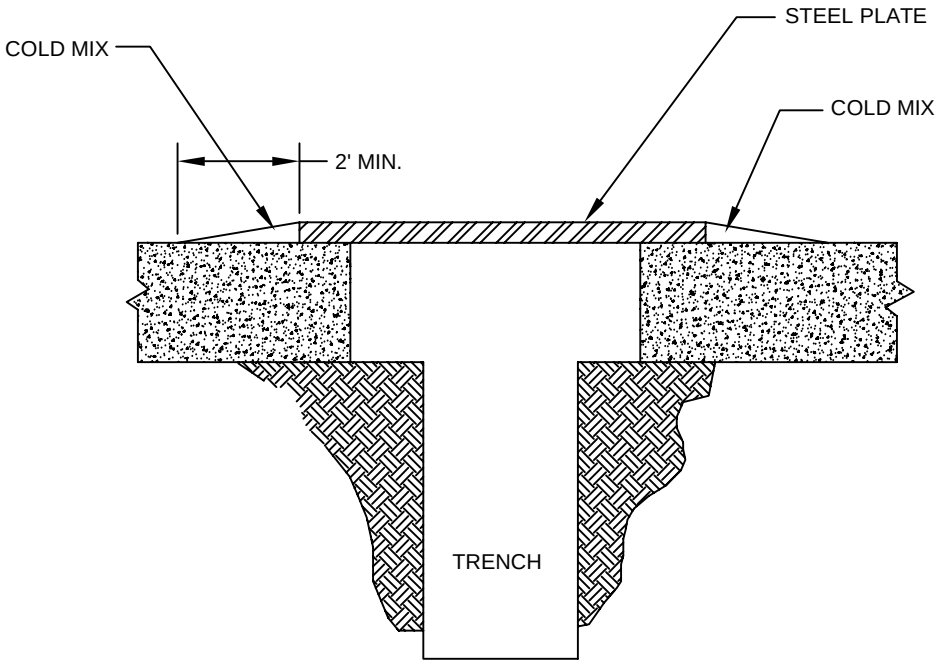

TYPE "B" PLATING
TOWN POSTED SPEEDS
UNDER 30 MPH

GILBERT ARIZONA	STANDARD DETAIL	TRENCH PLATING	APPROVED TOWN ENGINEER DATE	DETAIL NO. GIL-271

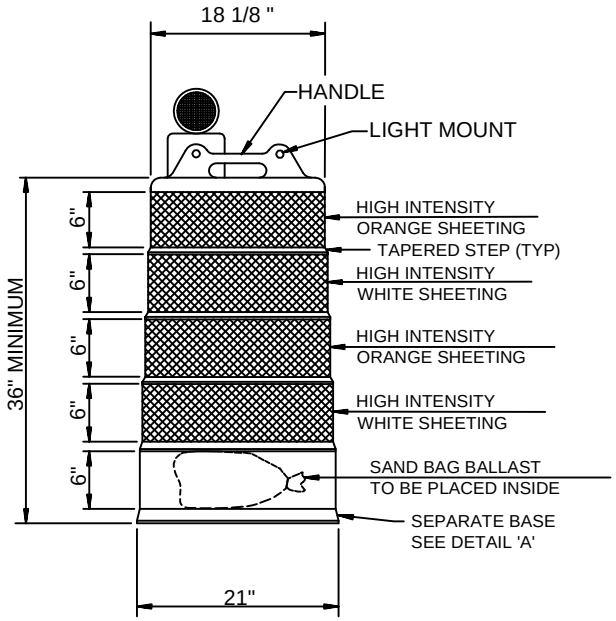

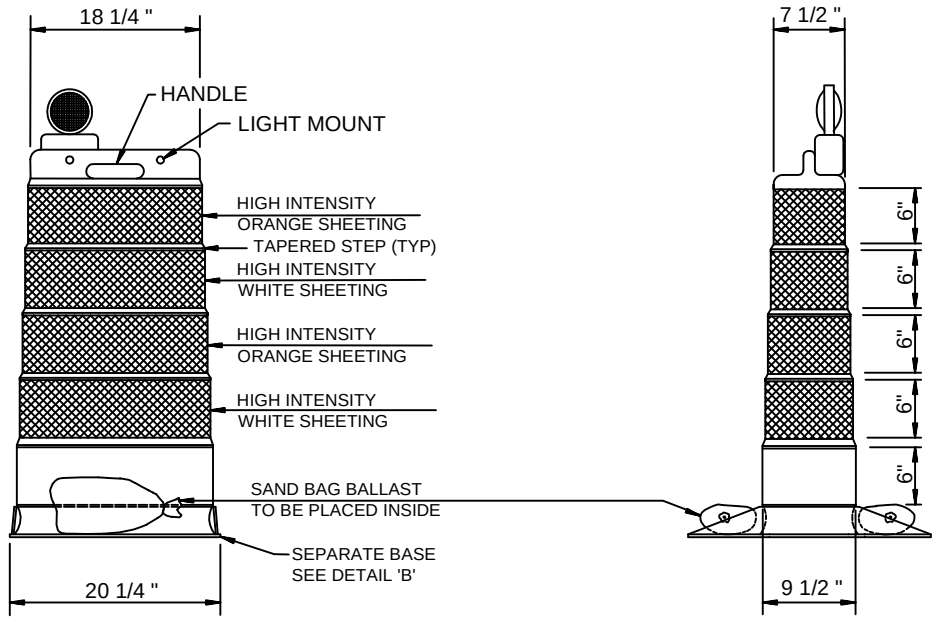

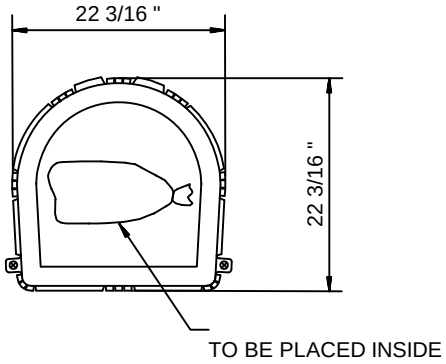

DETAIL A

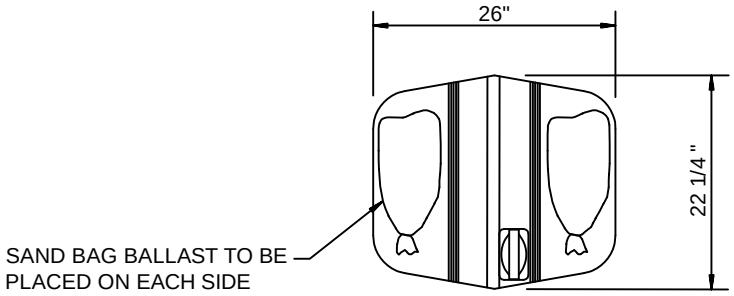

DETAIL B

GILBERT ARIZONA	STANDARD DETAIL	TRAFFIC DRUM DETAILS	APPROVED TOWN ENGINEER DATE	DETAIL NO. GIL-272

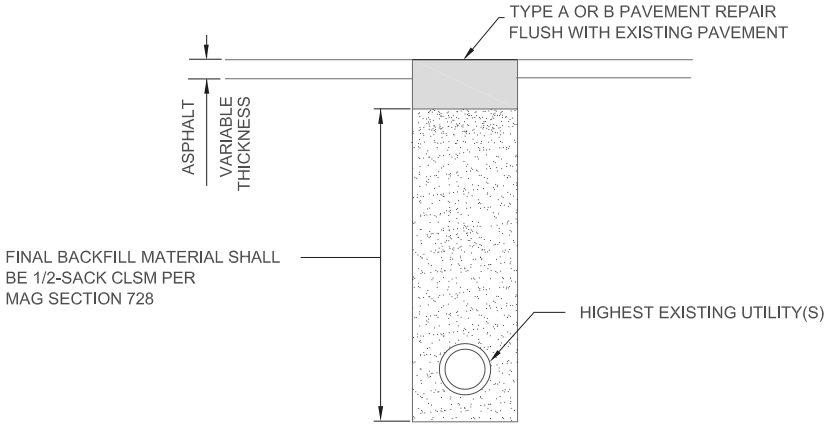

SECTION VIEW

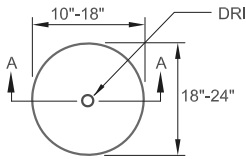

PLAN VIEW

NOTES:
1. CUT, REMOVE AND REPLACE PAVEMENT. PLUG IN ACCORDANCE WITH MAG SECTION 355.
2. PLACE BACKFILL IN ACCORDANCE WITH MAG SECTION 355.
3. BONDING MATERIAL SHALL BE AS SPECIFIED IN MAG SECTION 708.

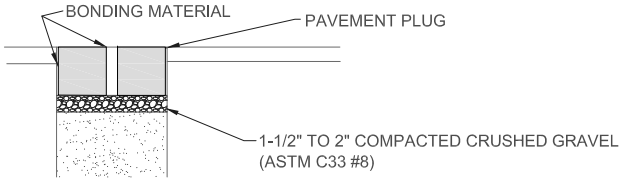

SECTION A–A

GILBERT ARIZONA	STANDARD DETAIL	UTILITY POTHOLE REPAIR	APPROVED TOWN ENGINEER DATE	DETAIL NO. GIL-273

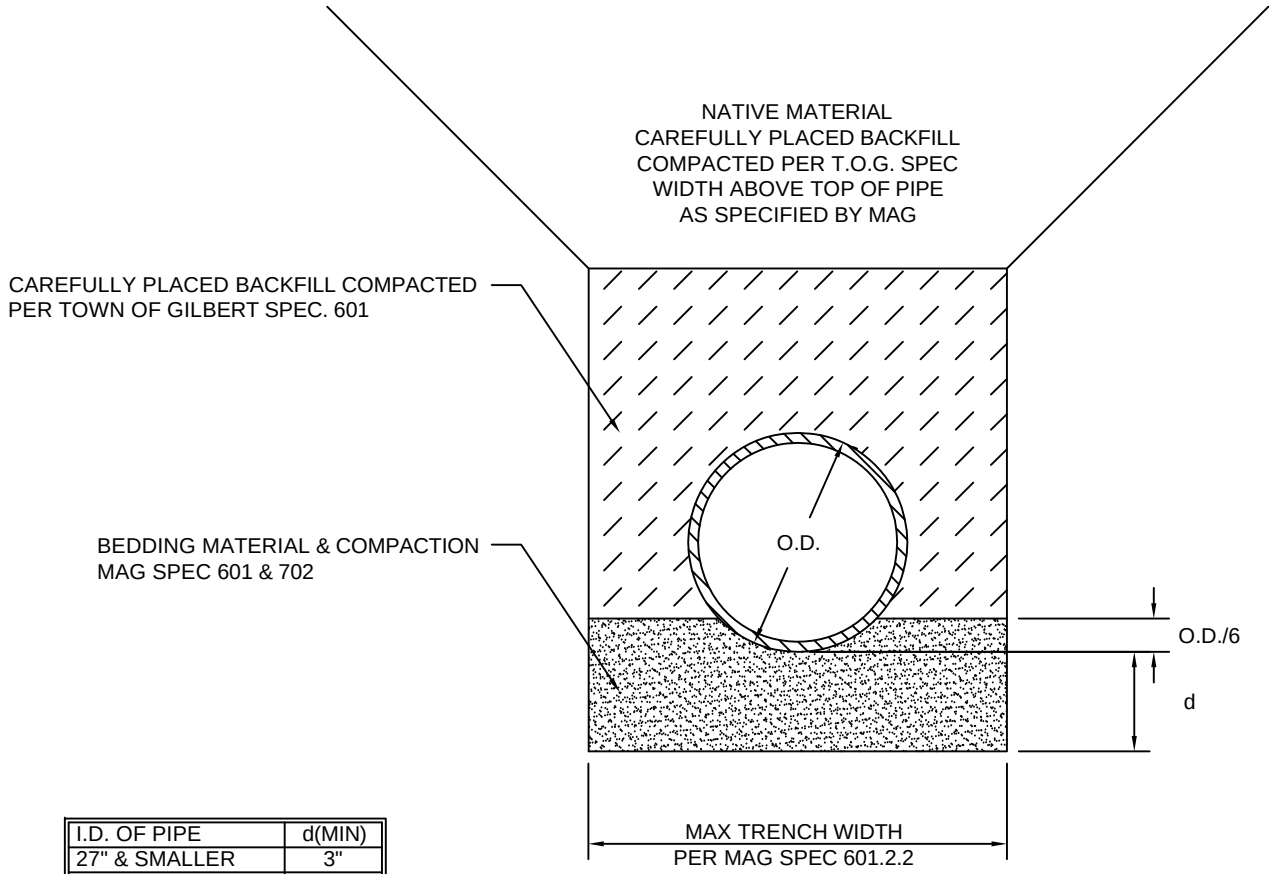

I.D. OF PIPE	d(MIN)
27" & SMALLER	3"
30" TO 60"	4"
66" & LARGER	6"

CONCRETE PIPE BEDDING DETAIL

GILBERT ARIZONA	STANDARD DETAIL	BEDDING DETAIL CONCRETE PIPE	APPROVED TOWN ENGINEER DATE	DETAIL NO. GIL-301

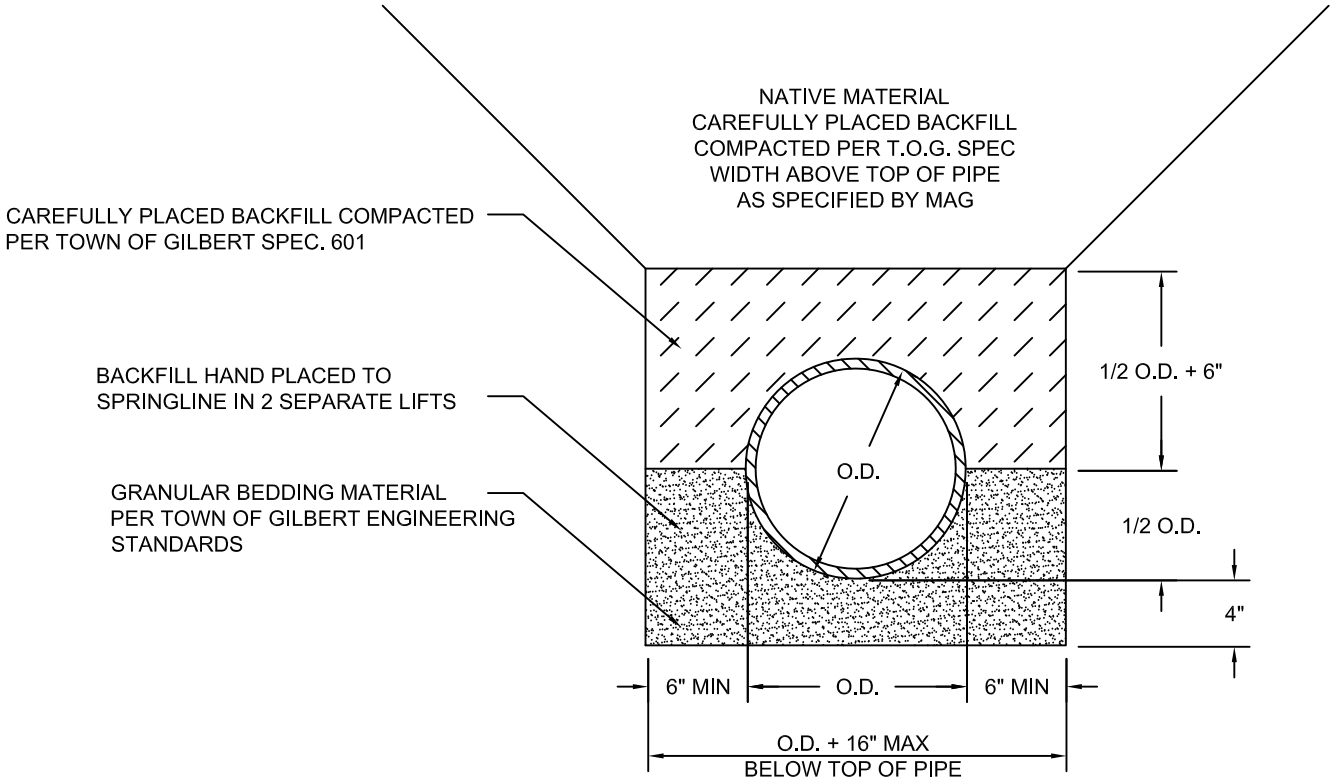

PVC WATER PIPE BEDDING DETAIL
C-900

GILBERT ARIZONA	STANDARD DETAIL	BEDDING DETAIL C-900 WATER PIPE	APPROVED TOWN ENGINEER DATE	DETAIL NO. GIL-302

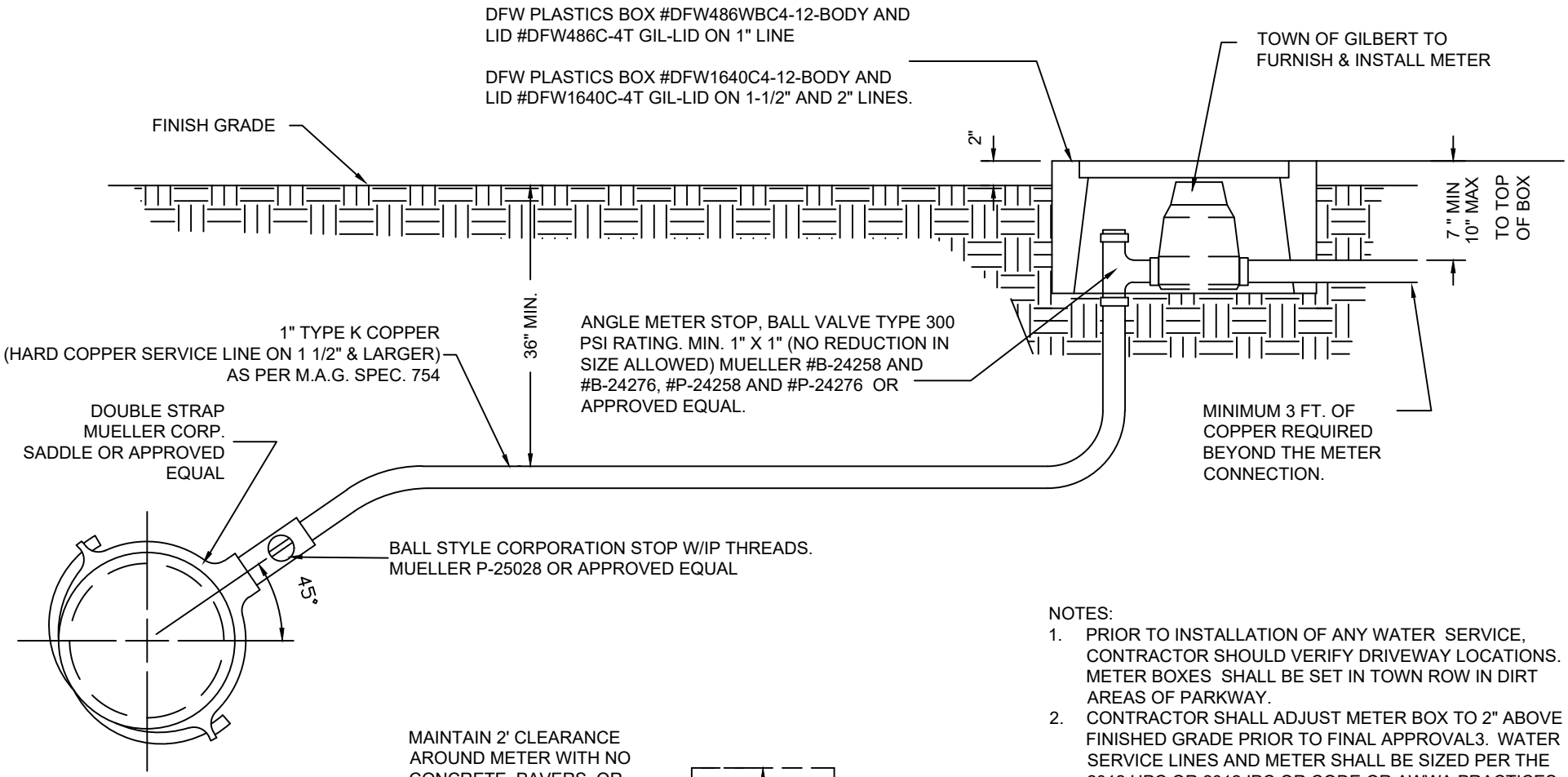

MAINTAIN 2' CLEARANCE AROUND METER WITH NO CONCRETE, PAVERS, OR OTHER HARD STRUCTURES

SET METER BOX AT 2" ABOVE SIDEWALK GRADE

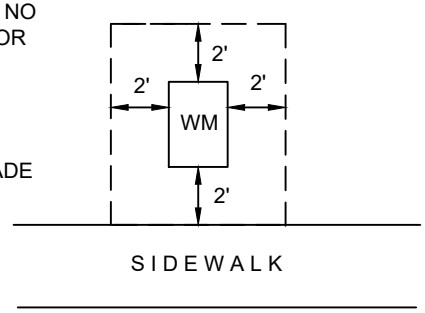

NOTES:

1. PRIOR TO INSTALLATION OF ANY WATER SERVICE, CONTRACTOR SHOULD VERIFY DRIVEWAY LOCATIONS. METER BOXES SHALL BE SET IN TOWN ROW IN DIRT AREAS OF PARKWAY.
2. CONTRACTOR SHALL ADJUST METER BOX TO 2" ABOVE FINISHED GRADE PRIOR TO FINAL APPROVAL3. WATER SERVICE LINES AND METER SHALL BE SIZED PER THE 2012 UPC OR 2012 IPC OR CODE OR AWWA PRACTICES AS APPLICABLE.
4. MINIMUM SERVICE SIZE FOR RESIDENTIAL IS 1" DIAMETER.
5. ALL BRASS PARTS MUST MEET NSF 61 LOW LEAD REQUIREMENTS AS OF JULY 1, 2012.
6. SERVICES INSTALLED WITHOUT METER BOX SHALL BE MARKED WITH A 1" FLEXIBLE BLUE CONDUIT OR WOOD 2"X4".
7. IF TREES OR SHRUBS ARE PLANTED WITHIN 6' OF THE METER BOX, THE METER AND BOX SHALL BE PROTECTED BY A ROOT BARRIER.

CLEARANCES AROUND METER BOX

GILBERT ARIZONA	STANDARD DETAIL	1" TO 2" WATER SERVICE INSTALLATION	APPROVED TOWN ENGINEER — DATE	DETAIL NO. GIL-310

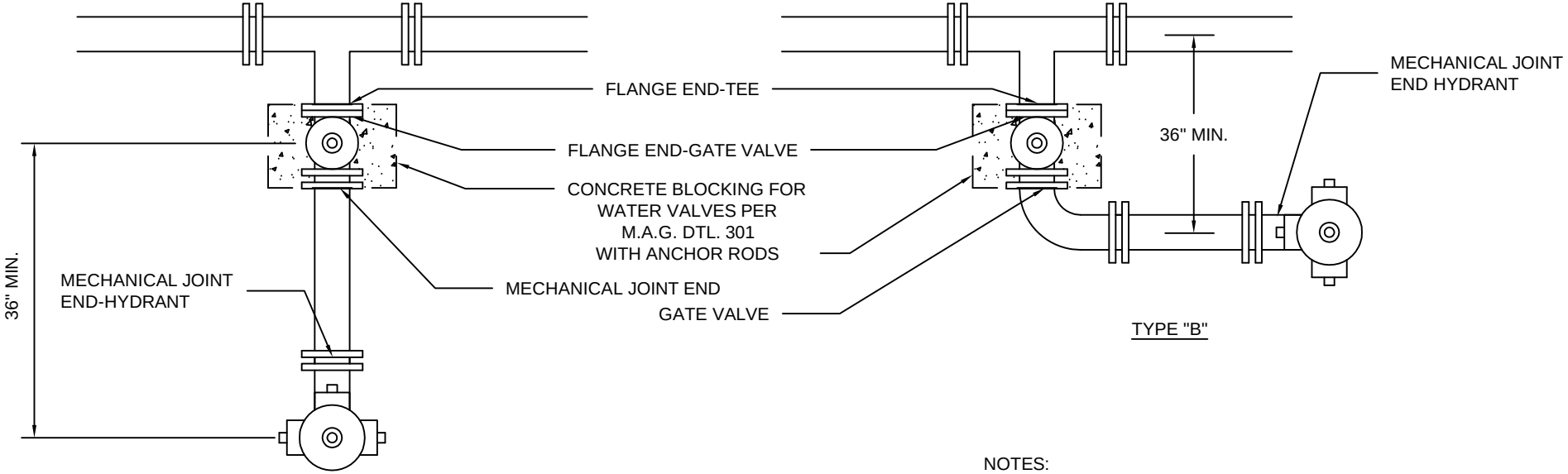

TYPE "A"

TYPE "B"

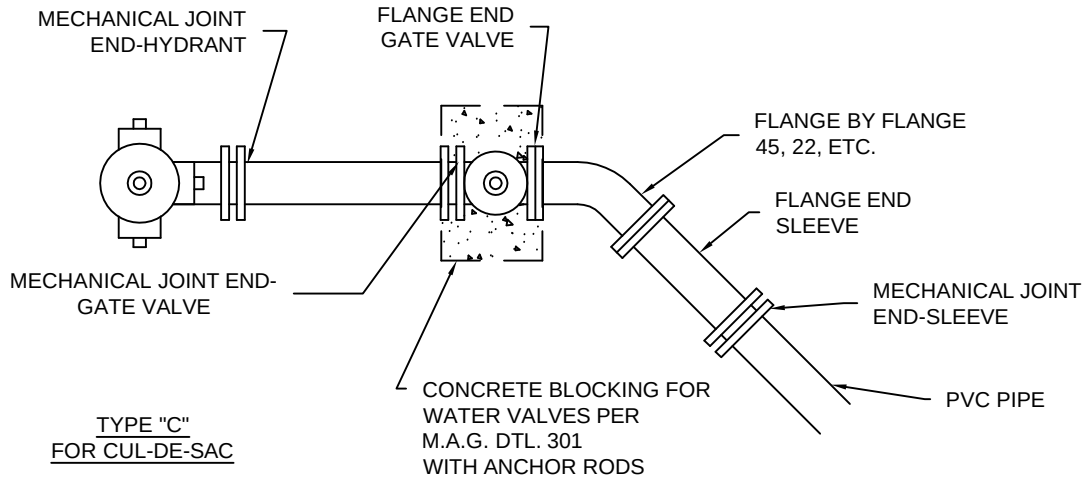

TYPE "C"
FOR CUL-DE-SAC

NOTES:

1. FIRE HYDRANT VALVES SHALL BE RESTRAINED TO MAIN LINE FITTING BY FLANGE.
2. FIRE HYDRANTS SHALL CONFORM TO T.O.G. FIRE HYDRANT SPECIFICATIONS
3. CONNECTIONS SHALL BE 2 1/2" N.S. & 4 1/2" N.S. THREADS.
4. VALVE BOX INSTALLATION PER M.A.G. DTL. 391-1-C.
5. ALL CONNECTIONS FROM THE MAIN LINE FITTING TO THE HYDRANT SHALL BE DUCTILE IRON.
6. CONSTRUCT DRAIN PIT PER M.A.G. DTL. 360-1.
7. LOCATE FIRE HYDRANT PER M.A.G. DETAIL 362
8. ELEVATION OF FIRE HYDRANT SHALL BE PER GIL-320-2.

GILBERT ARIZONA	STANDARD DETAIL	FIRE HYDRANT	APPROVED TOWN ENGINEER DATE	DETAIL NO. GIL-320-1

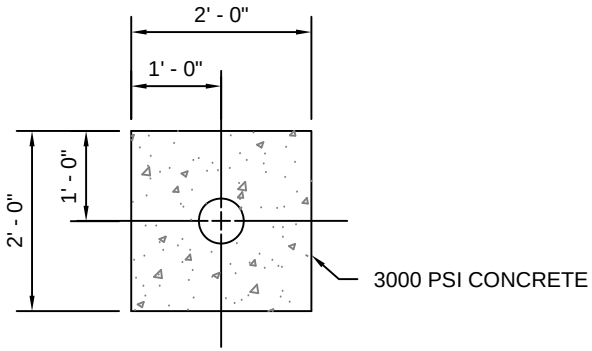

PAD DETAIL

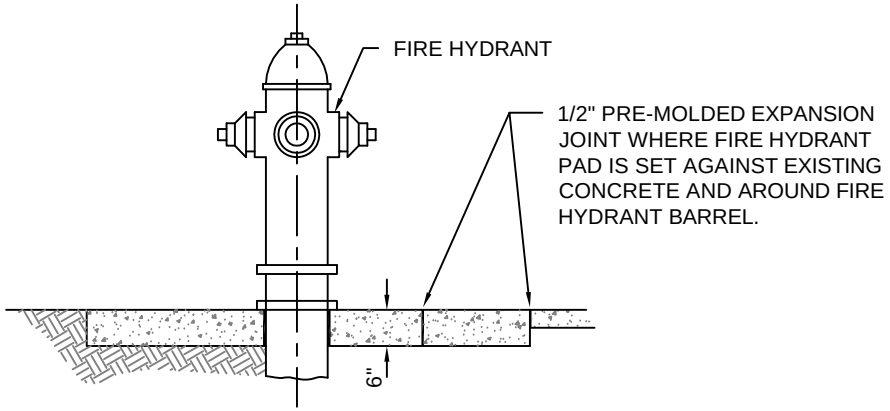

FIRE HYDRANT IN SIDEWALK

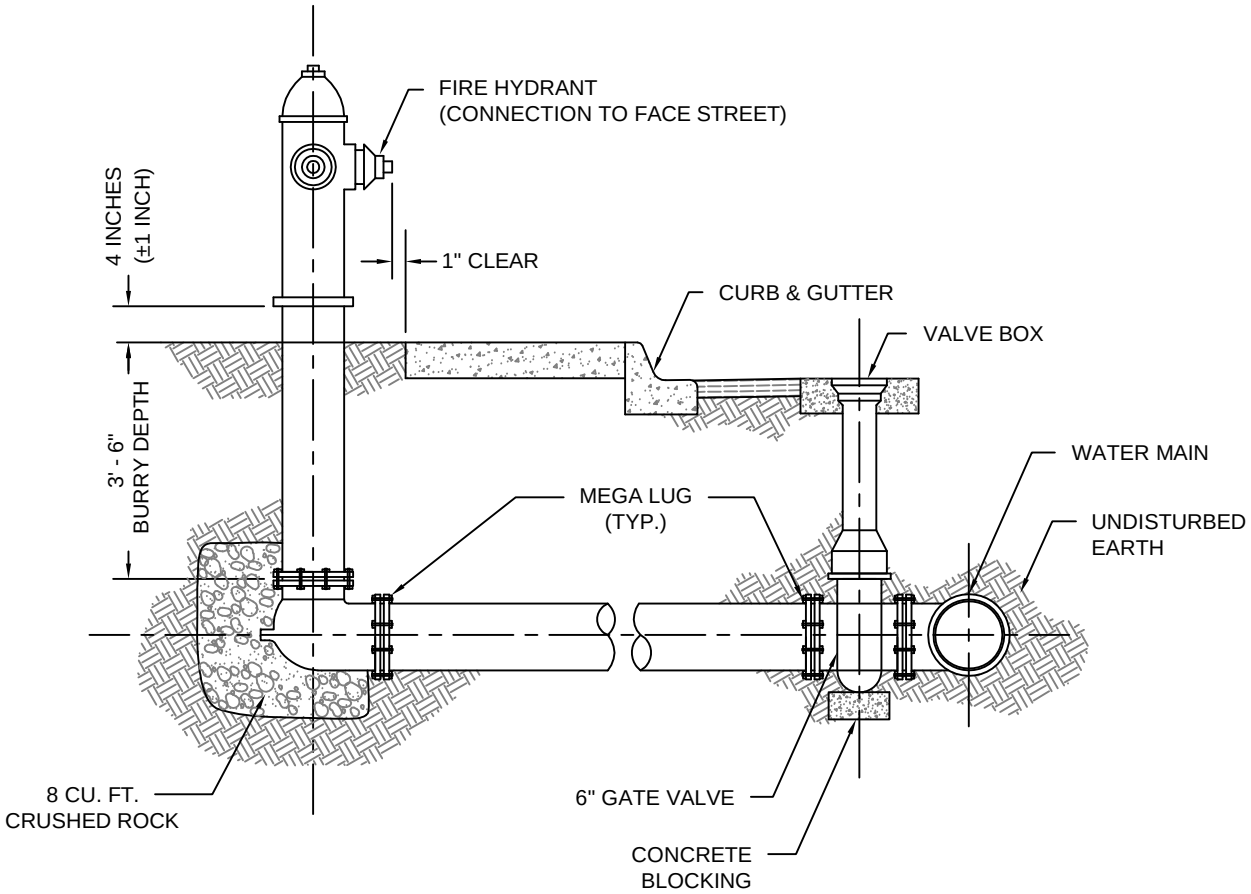

GILBERT ARIZONA	STANDARD DETAIL	FIRE HYDRANT	APPROVED TOWN ENGINEER DATE	DETAIL NO. GIL-320-2

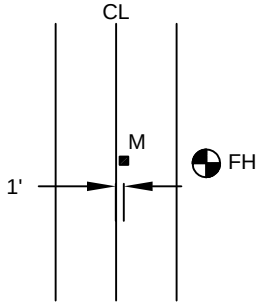

MIDBLOCK LOCAL

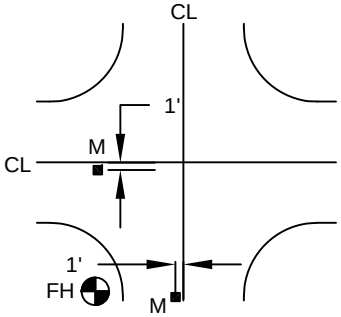

LOCAL CROSS INTERSECTION

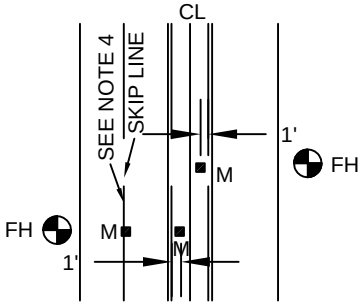

MIDBLOCK WITH CENTER LANE OR SKIP LINES

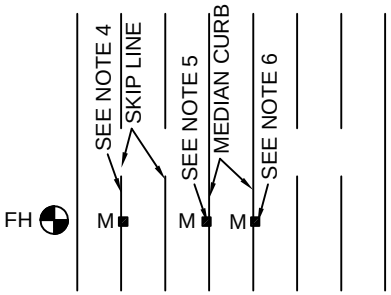

MIDBLOCK WITH RAISED MEDIAN

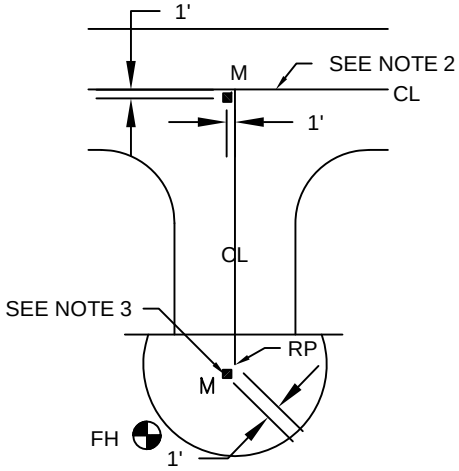

CUL-DE-SAC STREET

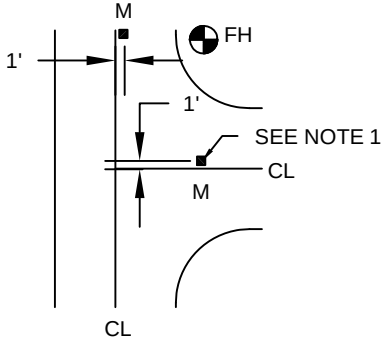

LOCAL 'T' INTERSECTION

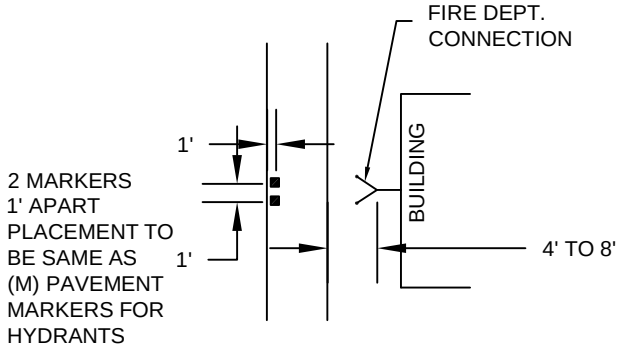

FIRE DEPT. CONNECTION

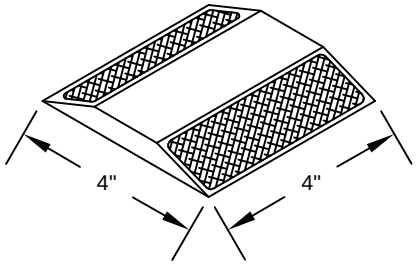

(M) PAVEMENT MARKER
(2-WAY REFLECTIVE BLUE)

NOTES:.

1. NOT REQUIRED ON DEAD END STREETS WITHOUT HYDRANTS.
2. PLACE ON HYDRANT SIDE OF THE CENTERLINE.
3. NOT REQUIRED WHEN CUL-DE-SAC IS LESS THAN 250'.
4. TO BE PLACED IN LINE WITH SKIP LINE.
5. PLACED ON GUTTER OR ADJACENT TO CURB.
6. PLACE ON TOP OF CURB. (THIS LOCATION OPTIONAL)
7. PAVEMENT MARKERS SHALL NOT BE PLACED WITHIN ONE FOOT OF A PAINT LINE. (CENTER TO CENTER)

GILBERT ARIZONA	STANDARD DETAIL	PAVEMENT MARKERS FOR FIRE HYDRANTS	APPROVED TOWN ENGINEER DATE	DETAIL NO. GIL-325

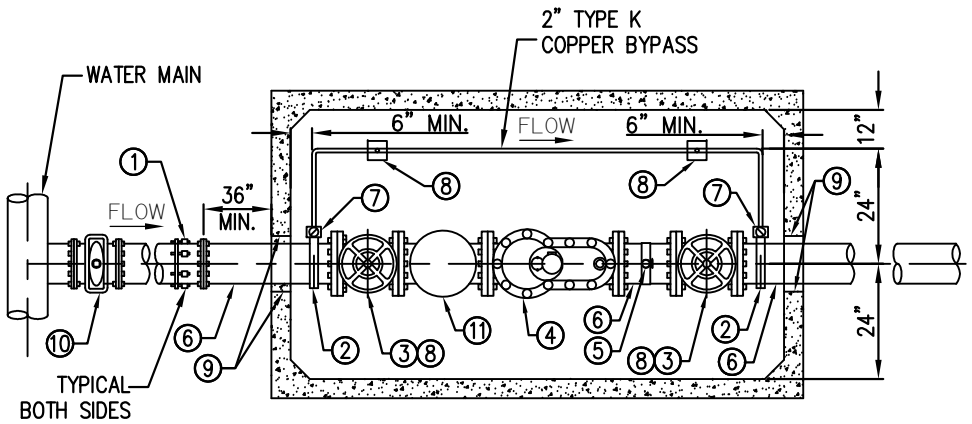

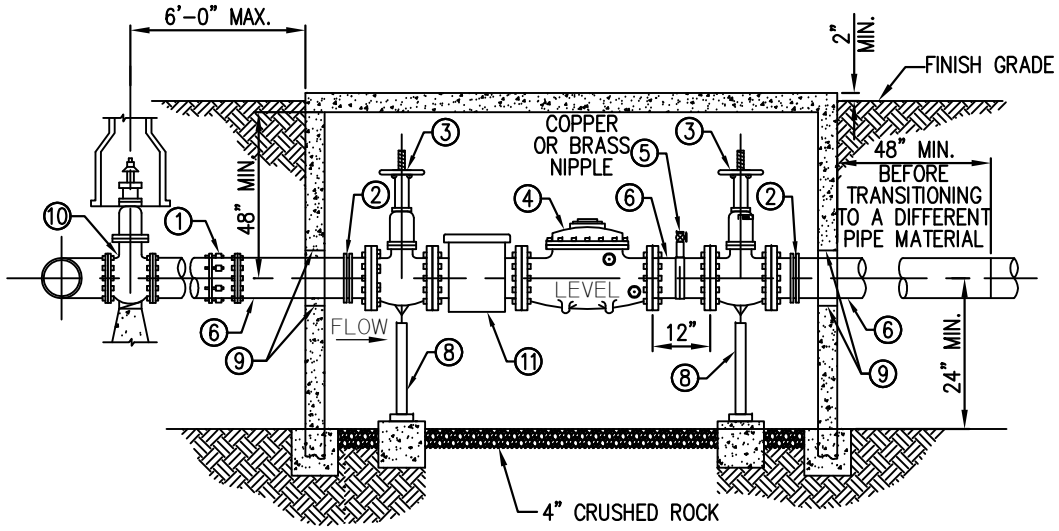

LIST OF MATERIALS

1. ADAPTER, FLANGED TO MECHANICAL JOINT FOR A.C.P.
2. DOUBLE STRAP, ALL BRONZE SERVICE SADDLE.
3. O.S.&Y. RISING STEM GATE VALVE, FLANGED WITH HAND WHEEL, OPEN LEFT, APPROVED RESILIENT WEDGE GATE VALVES INCLUDE MUELLER, AMERICAN DARLING, AND WATEROUS.
4. WATER METER: CONTACT TOWN OF GILBERT
5. DOUBLE STRAP BRONZE SADDLE, COPPER OR BRASS NIPPLE AND GATE VALVE.

   2" FOR 3"/4" METER
   3" FOR 6" METER

6. C.I.P. SPOOL, FLANGED BOTH ENDS.
7. 2" CURB STOP (BALL TYPE) WITH LOCKABLE DEVICE.
8. ADJUSTABLE METAL PIPE SUPPORTS ON 6"X6"X6" CONCRETE BASE. (4) REQUIRED (ONE UNDER EACH VALVE AND 2 UNDER THE BY PASS).
9. GROUT WALLS OF VAULT AT EACH PIPE OPENING.
10. GATE VALVE, VALVE BOX, AND COVER PER M.A.G. STANDARD DETAIL 391-1, TYPE "C".
11. STRAINER ON INLET SIDE OF METER.

NOTE:
ALL METERS SHALL BE PURCHASED FROM TOWN OF GILBERT.

GILBERT ARIZONA	STANDARD DETAIL	3", 4" & 6" WATER METER	APPROVED TOWN ENGINEER DATE	DETAIL NO. GIL-340-1

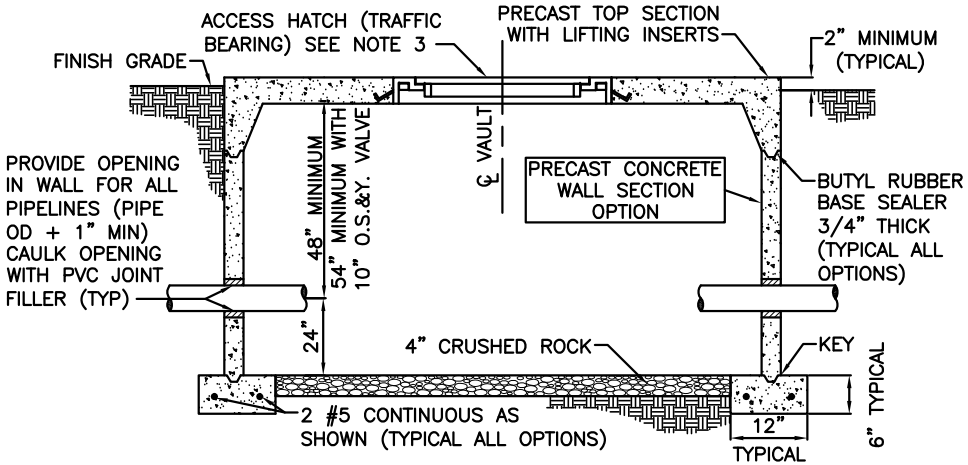

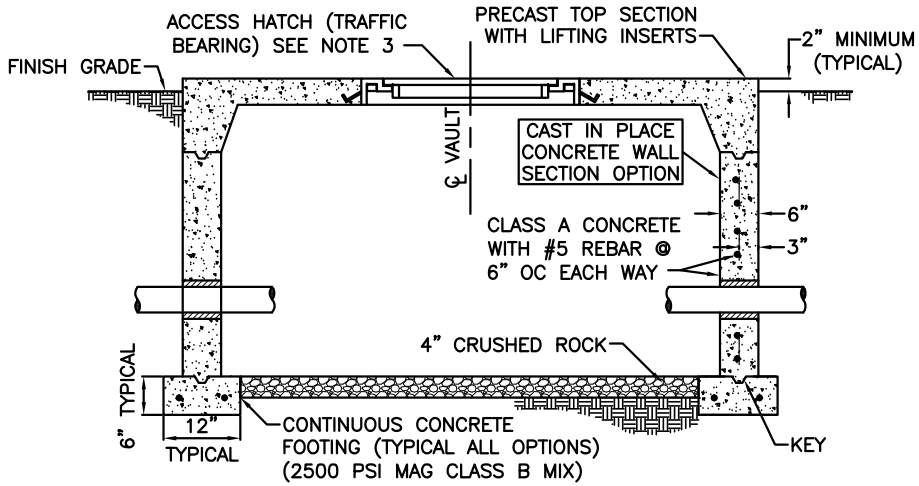

CONSTRUCTION NOTES:

1. METER VAULT SHALL BE LOCATED IN AREA IMMEDIATELY ADJACENT TO, OR BE ACCESSIBLE FROM, A PERMANENT VEHICULAR ACCESS ROAD (BUT NOT IN A TRAFFIC AREA).

2. METER VAULT WALLS MAY BE CONSTRUCTED OF CAST–IN–PLACE CONCRETE, OR PRECAST CONCRETE. TOP SECTION SHALL BE PRECAST CONCRETE WITH LIFTING INSERTS AND ACCESS HATCH INSTALLED BY PRECAST MANUFACTURER.

3. ACCESS HATCH SHALL BE 42" SQUARE TYPE "J" SPECIAL AS MANUFACTURED BY THE BILCO COMPANY OR 42" SQUARE AS MANUFACTURED BY UTILITY VAULT COMPANY. THE HATCH SHALL BE FLUSH MOUNTED, TORSION ASSISTED WITH REMOVABLE HANDLE OR PENTA HEAD BOLTS. THE HATCH SHALL BE DIAMOND PATTERN ALUMINUM. ALL SURFACES IN CONTACT WITH CONCRETE SHALL BE COATED WITH COAL TAR EPOXY.

4. SEE TABLE FOR MINIMUM INTERIOR VAULT DIMENSIONS REQUIRED BY VARIOUS TYPES AND SIZES OF WATER METERS.

METER TYPE	METER SIZE	METER INSIDE VAULT DIMENSIONS*		
		WIDTH	LENGTH	HEIGHT
METER	3"	6'-0"	6'-3"	6'-0"
	4"	6'-0"	7'-6"	6'-0"
	6"	6'-9"	8'-6"	6'-0"
	8"	6'-9"	8'-6"	6'-0"

* DIMENSION SHOWN REPRESENT ACCEPTABLE MINIMUMS. CONTRACTOR SHALL VERIFY THAT SPECIFIED MINIMUM CLEAR DISTANCES BETWEEN PIPING AND VAULT ARE PROVIDED BASED ON ACTUAL EQUIPMENT BEING FURNISHED. (MINIMUM WIDTH OF VAULTS TO BE 6'–0".)

NOTE:
METER VAULTS SHALL NOT BE INSTALLED IN DRIVEWAYS OR IN A LOCATION INACCESSIBLE TO MAINTENANCE VEHICLES. ALL METERS SHALL BE PURCHASED FROM THE TOWN OF GILBERT.

GILBERT ARIZONA	STANDARD DETAIL	STANDARD WATER METER VAULT	APPROVED _____ TOWN ENGINEER _____ DATE	DETAIL NO. GIL-340-2

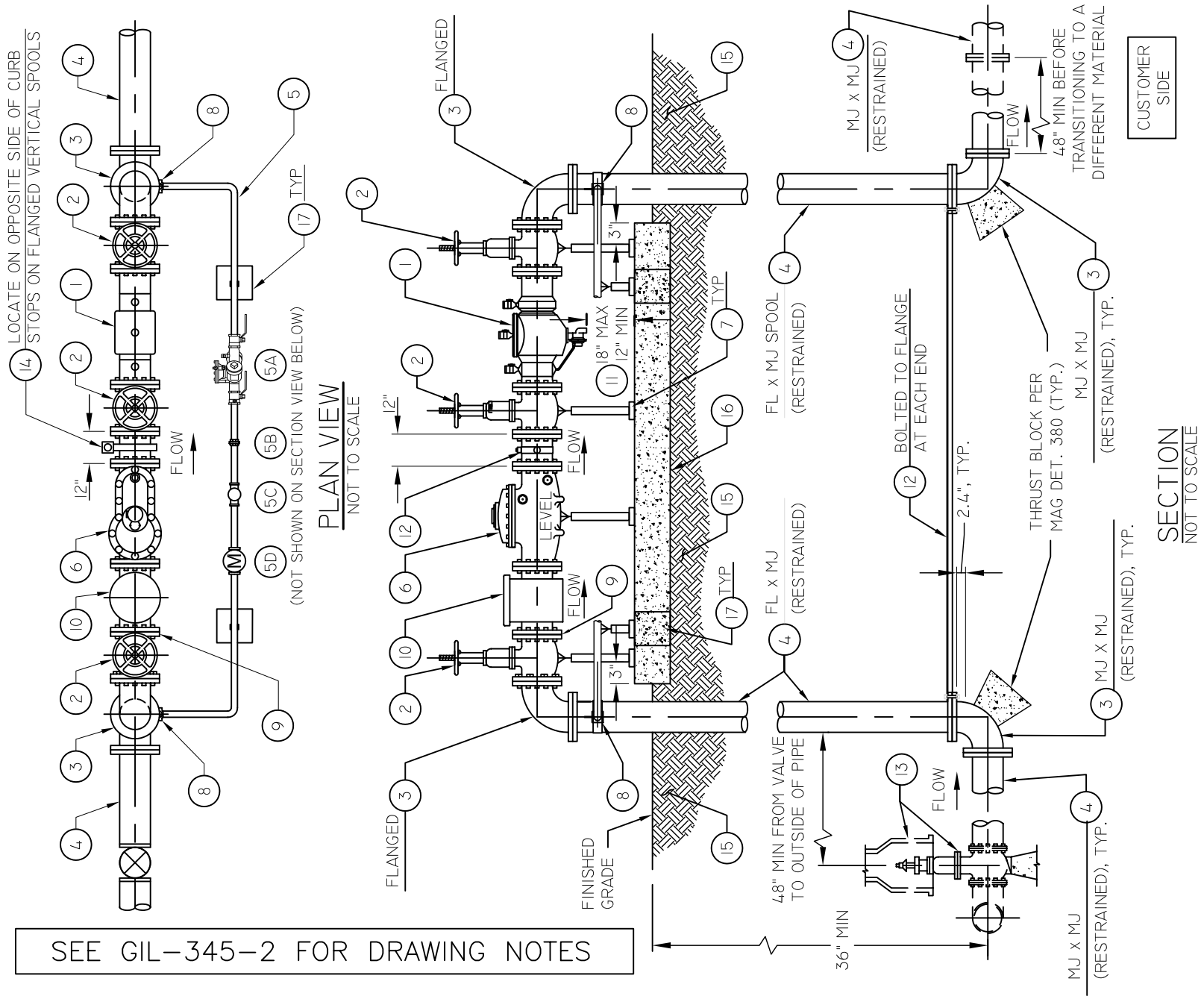

SEE GIL-345-2 FOR DRAWING NOTES

ALL FLANGE BOLTS AND NUTS AND STUDS IN ALL ABOVE GROUND FLANGES TO BE 316 STAINLESS STEEL OR LARGER DEPENDING ON SIZE OF FLANGE, LUBRICATED WITH FOOD GRADE ANTI-SEIZE COMPOUND

EPA-SWDA SECTION 1417(D), AMENDED 1-4-2014: (WET) DOMESTIC BRASS PLUMBING FIXTURES NOT LIMITED TO BACKFLOW PREVENTION ASSEMBLIES SHALL CONTAIN NO GREATER THAN <0.25% TOTAL LEAD CONTENT.

ABOVE GROUND INSTALLATIONS SHALL BE PROTECTED BY GUARD POST. REFER TO DETAIL GIL-359

GILBERT ARIZONA	STANDARD DETAIL	NON-FIRE-RATED 3" AND LARGER WATER METER ASSEMBLY (WITH BACKFLOW)	APPROVED TOWN ENGINEER DATE	DETAIL NO. GIL-345-1

GILBERT ARIZONA

STANDARD DETAIL

NON-FIRE-RATED 3" AND LARGER WATER METER ASSEMBLY (WITH BACKFLOW)

APPROVED

TOWN ENGINEER

DATE

DETAIL No. GIL-345-2

SEE GIL-345-1 FOR DRAWING DETAILS

METER ASSEMBLY KEY NOTES

1. BACKFLOW PREVENTOR: FLANGE BY FLANGE BACKFLOW TO BE INSTALLED. BACKFLOW SHALL BE A REDUCED PRESSURE PRINCIPLE ASSEMBLY, AND APPROVED BY THE U.S.C. FOUNDATION FOR CROSS CONNECTION AND HYDRAULIC RESEARCH. THE BACKFLOW PREVENTOR SHALL BE OWNED & MAINTAINED BY THE PROPERTY OWNER. CONTACT THE TOWN OF GILBERT BACKFLOW PREVENTION DEVISION FOR THE MOST CURRENT LIST OF APPROVED BACKFLOW PREVENTION ASSEMBLIES. ASSEMBLIES SHALL MEET EPA-SDWA SECTION 1417(D), <0.25% STANDARD ON TOTAL LEAD CONTENT.
2. OUTSIDE STEM & YOKE (OS & Y) RISING STEM GATE VALVE, FLANGE BY FLANGE WITH HAND WHEEL OPENING COUNTER CLOCKWISE. NSF APPROVED. APPROVED MANUFACTURERS, CLOW, MUELLER, WATEROUS OR APPROVED EQUIVALENT.
3. 90° ELBOW D.I.P. FLANGE BY FLANGE ABOVEGROUND - MJ X MJ MEGA RESTRAINED BELOW GROUND.
4. PIPE SPOOL - FLANGE ABOVEGROUND X MJ MEGA RESTRAINED UNDERGROUND D.I.P. 3" THRU 10"
5. METER ASSEMBLY WILL BE REQUIRED TO HAVE A 2" METERED BYPASS LINE INCLUDING ITS OWN 2" BACKFLOW ON THE BY-PASS LINE. THIS WILL ASSURE WATER SERVICE TO THE CUSTOMER WHILE REPAIR AND SERVICE IS BEING PERFORMED ON THE METER. ALL BYPASS LINES SHALL BE CONSTRUCTED WITH MINIMUM OF 2" TYPE K (HARD) COPPER PIPE AND FITTINGS SHALL BE CONNECTED WITH LEAD-FREE SOLDER JOINTS.
   - 5A 2" REDUCED PRESSURE PRINCIPAL BACKFLOW PREVENTER, CONTACT THE TOWN OF GILBERT BACKFLOW PREVENTION DEVISION FOR THE MOST CURRENT LIST OF APPROVED BACKFLOW ASSEMBLIES.
   - 5B 2" BRASS UNION
   - 5C 2" BRONZE CHECK VALVE
   - 5D 2" TURBINE FLOW METER SHALL MEET THE TOWN STANDARDS FROM AN APPROVED VENDOR/DISTRIBUTOR
6. TURBO WATER METER SET BY THE TOWN OF GILBERT STANDARD DETAILS THAT MUST BE NSF APPROVED TO THE LATEST STANDARDS. THE FLOW DIRECTION OF THE METER MUST CORRESPOND WITH THE FLOW DIRECTION AT INSTALLATION. ALL METERS SHALL BE PURCHASED FROM A TOWN OF GILBERT APPROVED VENDOR/DISTRIBUTOR. (TOWN APPROVED METER MAY BE COMBINATION STRAINER-METER-TEST PORT)
7. ADJUSTABLE METAL PIPE SUPPORTS FOR 3" & LARGER ASSEMBLIES ONLY (POWDER COATED UNLESS OTHERWISE NOTED ON PLANS) ON CONCRETE SLAB. PIPE SUPPORTS SHALL BE UNDER WATER METER, VALVES, AND BY-PASS LINE.
8. DOUBLE STRAP BRONZE SADDLE, 2" x CLOSE BRASS NIPPLE AND 2" FORD B-11-777W LOCKING CURB STOP OR APPORVED EQUAL. WITH 1-7/8" TAP (NSF APPROVED)
9. CONTRACTOR SHALL PROVIDE AND INSTALL A 1" FLANGE SPACER BETWEEN THE GATE VALVE AND THE STRAINER ON THE WATER METER ASSEMBLY FOR 3" AND LARGER SIZES.
10. STRAINER SHALL MEET OR EXCEED AWWA APPROVED, LEAD FREE AND CURRENT NSE REGULATION COMPLIANT, BRONZE OR STAINLESS STEEL BODY, Z PLATE STRAINER EQUIPPED WITH 316 STAINLESS STEEL FASTENERS, STAINLESS STEEL BODY OR BRASS DRAIN PLUG, AND STAINLESS STEEL SCREEN DIRECTLY UPSTREAM OF THE WATER METER USING 316 STAINLESS STEEL HARDWARE. (TOWN APPROVED METER MAY BE COMBINATION STRAINER-METER-TEST PORT)
11. CLEARANCE REQUIREMENTS FOR ASSEMBLIES (12" MIN. , 18" MAX.)
12. ZINC COATED THREADED STEEL ROD, BOLT TO FLANGES AS SHOWN, TYPICAL BOTH SIDES. ROD DIAMETER TO MATCH NOMINAL BOLT DIAMETER FOR CONNECTING FLANGES.
13. WHERE A SINGLE DEDICATED VALVE FOR THE METER ASSEMBLY DOES NOT ALREADY EXIST, INSTALL A GATE VALVE AND VALVE BOX & COVER PER MAG DETAILS 301 AND 391-1 & 391-2 TYPE C. BURIED VALVES SHALL BE PER WATER RESOURCES APPROVED PRODUCTS LIST.
14. FLANGE X FLANGE 12" SPOOL WITH TEST FOR FOR ANNUAL INSPECTIONS. (TOWN APPROVED METER MAY BE COMBINATION STRAINER-METER-TEST PORT)
15. FINISHED GRADE BENEATH METER ASSEMBLY. GRADE LEVEL AND FREE OF TRIP HAZARDS. COMPACT TO 95% OF MAXIMUM DENSITY.
16. CONCRETE BASE FOR ADJUSTABLE METAL PIPE SUPPORTS, 6" X 12" CONTINUOUS BENEATH ASSEMBLY AS SHOWN.
17. 6"X 6"X 6" CONCRETE BASE FOR ADJUSTABLE METAL PIPE SUPPORTS BENEATH ASSEMBLY AS SHOWN.

ASSEMBLY MUST BE PAINTED WITH RUST-O-LEUM PRODUCT CODE: 249032, GLOSS KHAKI COLOR OR APPROVED EQUIVALENT KHAKI COLOR COATING. CONTRACTOR SHALL NT PAINT: NAME PLATES, VALVE STEMS, METER DIALS, ELECTRONIC COMPONENTS, OR TEST PLUGS.

TOWN OF GILBERT LARGE WATER METERS (3" AND LARGER) SHALL BE LOCATED IN AN AREA ADJACENT TO OR BE IMMEDIATELY ACCESSIBLE FROM A PERMANENT VEHICLE ACCESS ROAD, BUT NOT IN TRAFFIC AREA

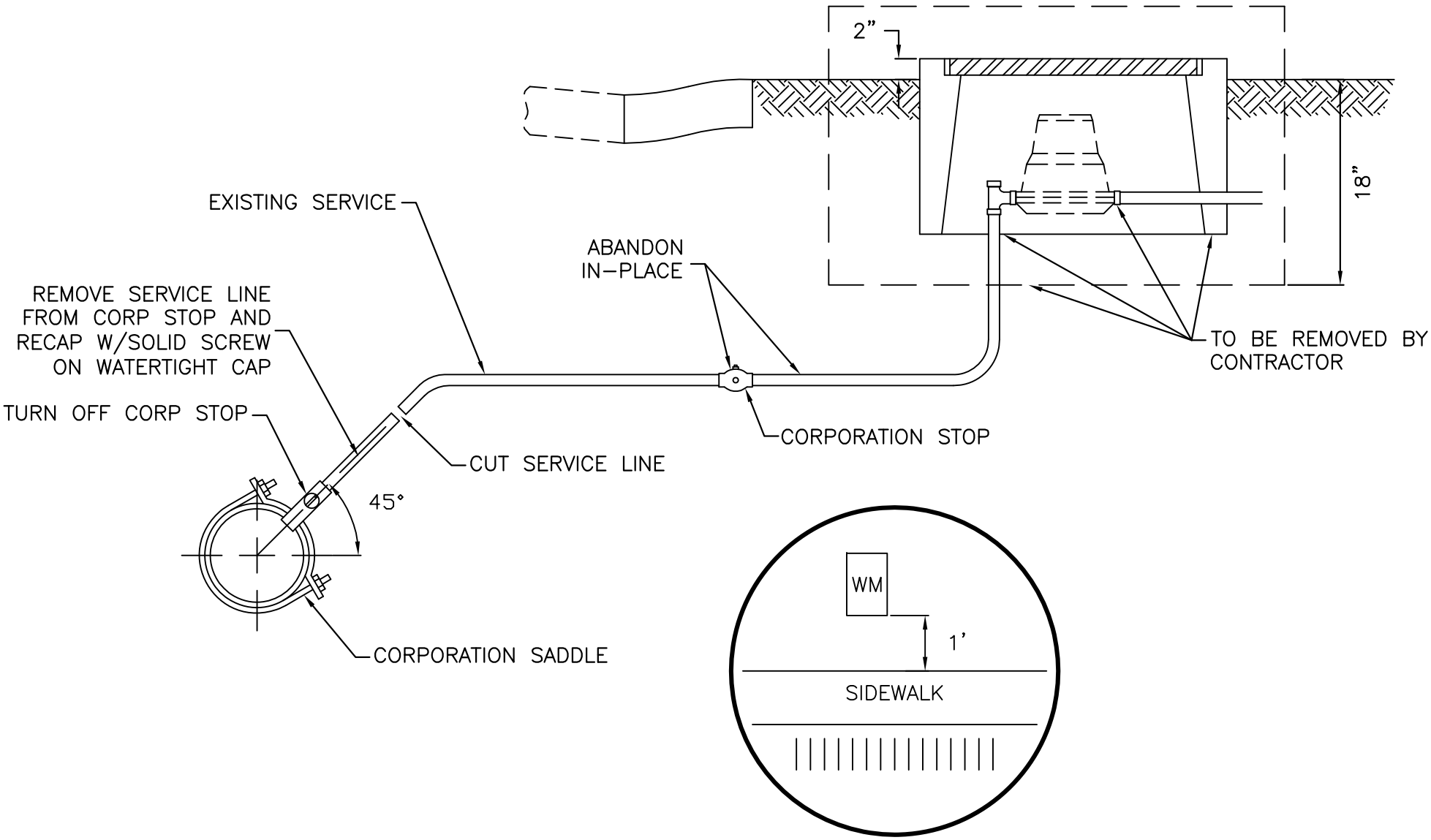

GILBERT ARIZONA	STANDARD DETAIL	1" TO 2" WATER SERVICE ABANDONMENT	APPROVED TOWN ENGINEER DATE	DETAIL NO. GIL-349

LIST OF MATERIALS:

1. APPROVED REDUCED PRESSURE PRINCIPLE BACKFLOW PREVENTER ASSEMBLY, BALL VALVES INCLUDED.
2. PIPING SHALL BE TYPE "K" HARD COPPER (3/4" THRU 2 1/2") USING LEAD-FREE SOLDER. 3" OR LARGER TO BE D.I.P..
3. BRASS FLARED TEST FITTINGS ARE REQUIRED ON ALL TEST COCKS
4. BRASS OR COPPER UNION (INSTALL ON DISCHARGE SIDE).
5. HEIGHT REQUIREMENTS FOR ASSEMBLIES (12" MIN.18 " MAX.).

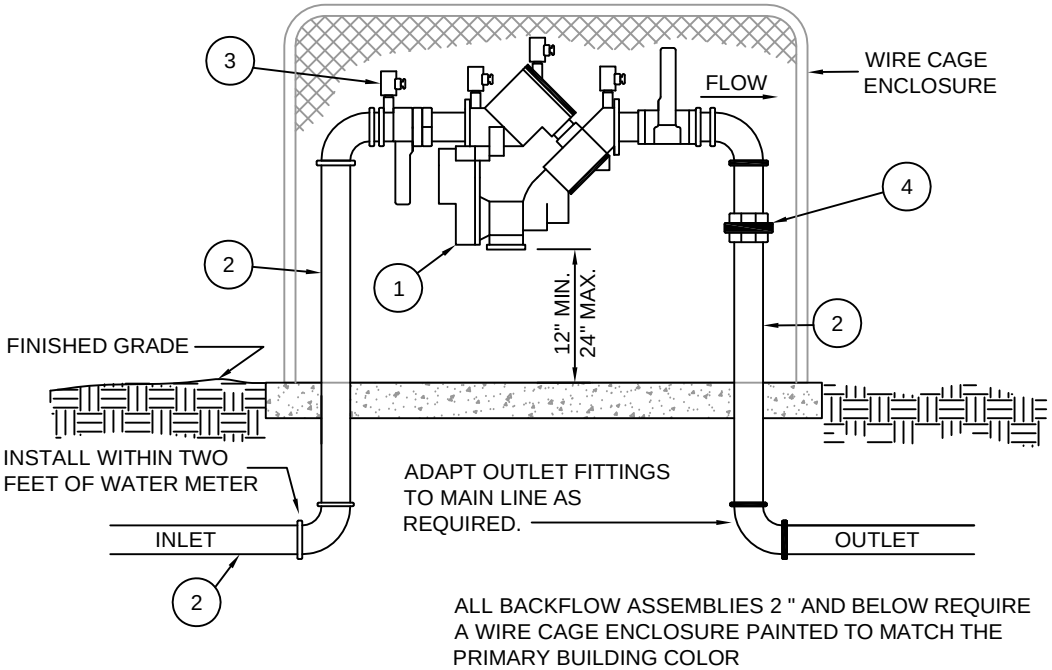

ALL BACKFLOW ASSEMBLIES 2 " AND BELOW REQUIRE A WIRE CAGE ENCLOSURE PAINTED TO MATCH THE PRIMARY BUILDING COLOR

GENERAL NOTES

1. CONTACT THE TOWN OF GILBERT BACKFLOW PREVENTION DEPARTMENT FOR THE MOST CURRENT LIST OF APPROVED BACKFLOW PREVENTION ASSEMBLIES.
2. ASSEMBLY SHALL BE APPROVED BY U.S.C. FOUNDATION FOR CROSS CONNECTION AND HYDRAULIC RESEARCH.
3. ABOVE GROUND INSTALLATIONS SHALL BE PROTECTED BY GUARD POSTS. SEE DETAIL GIL-359.
4. ASSEMBLY SHALL BE INSTALLED LEVEL AND NOT IN A FLOOD PLAIN.
5. ASSEMBLY SHALL BE TESTED PRIOR TO BEING ACCEPTED. (CONTACT T.O.G. BF DEPT. FOR LIST OF CERTIFIED TESTERS.).
6. ASSEMBLY SHALL NOT BE INSTALLED ANY CLOSER THAN 24" FROM A WALL OR OBSTRUCTION (IF TEST COCKS FACE THE WALL) OR 12" FROM A WALL (IF TEST COCKS FACE AWAY).
7. CONCRETE SUPPORT PAD SHALL BE A MINIMUM OF 18" WIDE BY LENGTH OF PRESSURE ASSEMBLY.
8. FINISHED GRADE UNDERNEATH ASSEMBLY SHALL BE AT 95% COMPACTION.
9. ASSEMBLY SHALL NOT BE PLACED FARTHER THAN 2' FROM THE WATER METER.
10. PIPE CONNECTION BETWEEN BACKFLOW ASSEMBLY AND METER SHALL BE OF TYPE "K" COPPER.
11. NO LESS THAN 36" OF COPPER SHALL EXIST DOWNSTREAM OF BACKFLOW.
12. EPA-SWDA SECTION 1417(d), AMENDED 1-4-2014: ALL (WET) DOMESTIC BRASS PLUMBING FIXTURES NOT LIMITED TO BACKFLOW PREVENTION ASSEMBLIES SHALL CONTAIN NO GREATER THAN <0.25% TOTAL LEAD CONTENT.

GILBERT ARIZONA	STANDARD DETAIL	2" AND SMALLER REDUCED PRESSURE PRINCIPLE ASSEMBLY	APPROVED TOWN ENGINEER DATE	DETAIL NO. GIL-350

LIST OF MATERIALS

1. APPROVED REDUCED PRESSURE PRINCIPLE BACKFLOW PREVENTION DEVICE.
2. COAT WITH COAL TAR EPOXY (16 MILS.).
3. O.S. & Y. GATE VALVE (RESILIENT SEAT).
4. 90 ELBOW (FLANGED D.I.P. 3" THRU 10") OR (TYPE "K" COPPER FOR 2 1/2").
5. PIPE SPOOL (FLANGED D.I.P. 3" THRU 10") OR (TYPE "K" COPPER FOR 2 1/2").
6. FLANGED ADAPTER (WHEN REQUIRED).
7. 3" X 3" X 1/4" STEEL ANGLE (FOR 4" & LARGER ASSEMBLY ONLY) BOLT TO FLANGE EACH END WITH ONE BOLT.
8. BRASS FLARED TEST FITTINGS ARE REQUIRED ON ALL TEST COCKS
9. ADJUSTABLE PIPE SUPPORT (FOR 3" & LARGER ASSEMBLY ONLY).
10. TAMPER SWITCH (ON FIRE LINE ONLY).
11. ELECTRICAL CONDUIT FOR TAMPER SWITCH (ON FIRE LINE ONLY).

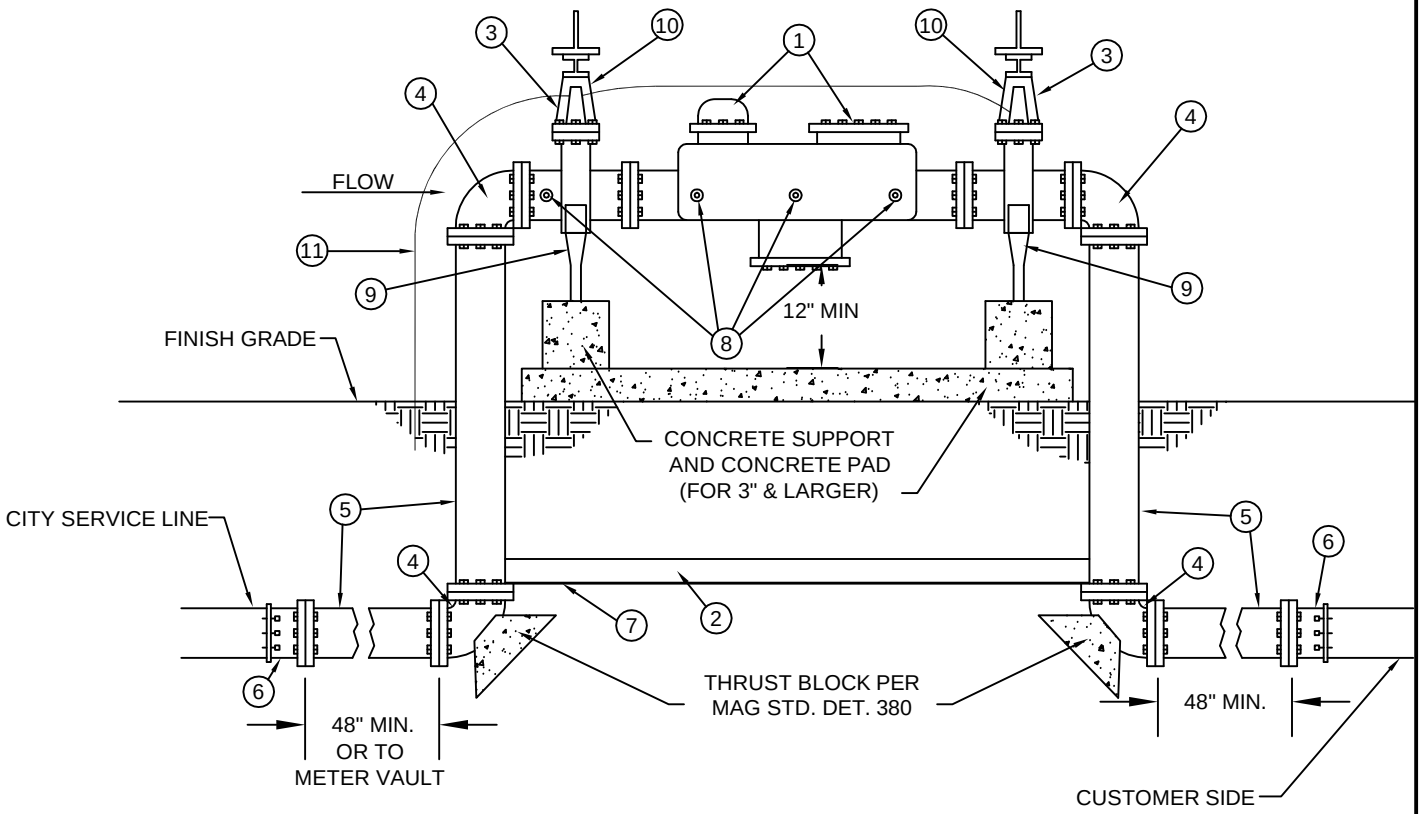

GENERAL NOTES

1. CONTACT THE TOWN OF GILBERT BACKFLOW PREVENTION DEPT FOR THE LATEST LIST OF APPROVED BACKFLOW PREVENTION DEVICES.
2. ASSEMBLY SHALL BE APPROVED BY U.S.C. FOUNDATION FOR CROSS CONNECTION AND HYDRAULIC RESEARCH.
3. FOUR (4) TEST COCKS SHALL BE INSTALLED AS PER U.S.C.. TEST COCKS SHALL BE FITTED WITH BRASS FLARED TEST FITTINGS.
4. ABOVE GROUND INSTALLATIONS SHALL BE PROTECTED BY GUARD POSTS. SEE DETAIL GIL-359.
5. COPPER FITTINGS SHALL BE CONNECTED WITH LEAD-FREE SOLDER JOINTS.
6. CONCRETE SUPPORT PAD SHALL BE MIN. 12" WIDE BY LENGTH OF PRESSURE ASSEMBLY.
7. FINISHED GRADE UNDERNEATH BACKFLOW PREVENTION ASSEMBLIES SHALL BE 95% COMPACTION.
8. ASSEMBLY TO BE PAINTED TAN OR TO MATCH BUILDING.

GILBERT ARIZONA	STANDARD DETAIL	2 1/2" AND LARGER REDUCED PRESSURE PRINCIPLE ASSEMBLY	APPROVED TOWN ENGINEER DATE	DETAIL NO. GIL-351

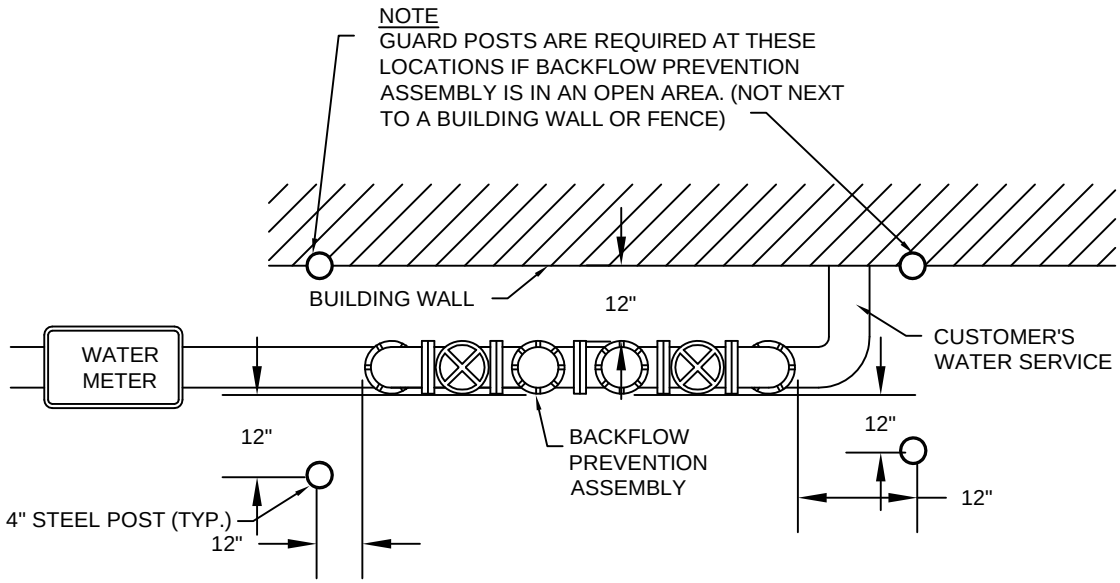

GUARD POST LOCATIONS FOR BACKFLOW PREVENTION ASSEMBLY

PLAN VIEW

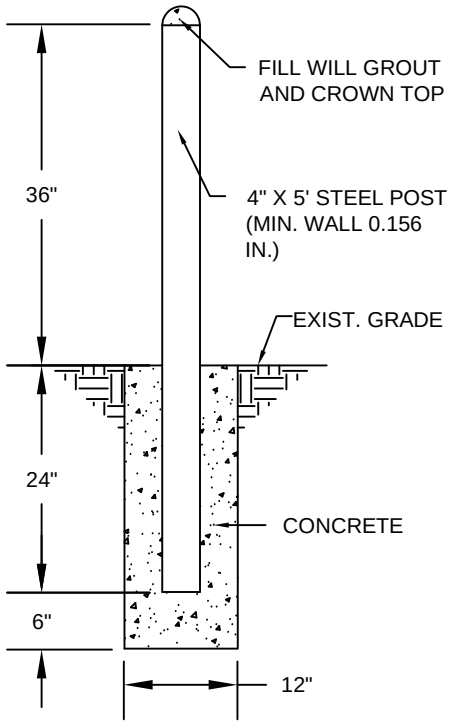

GUARD POST SECTION

GILBERT ARIZONA	STANDARD DETAIL	GUARD POSTS	APPROVED TOWN ENGINEER DATE	DETAIL NO. GIL-359

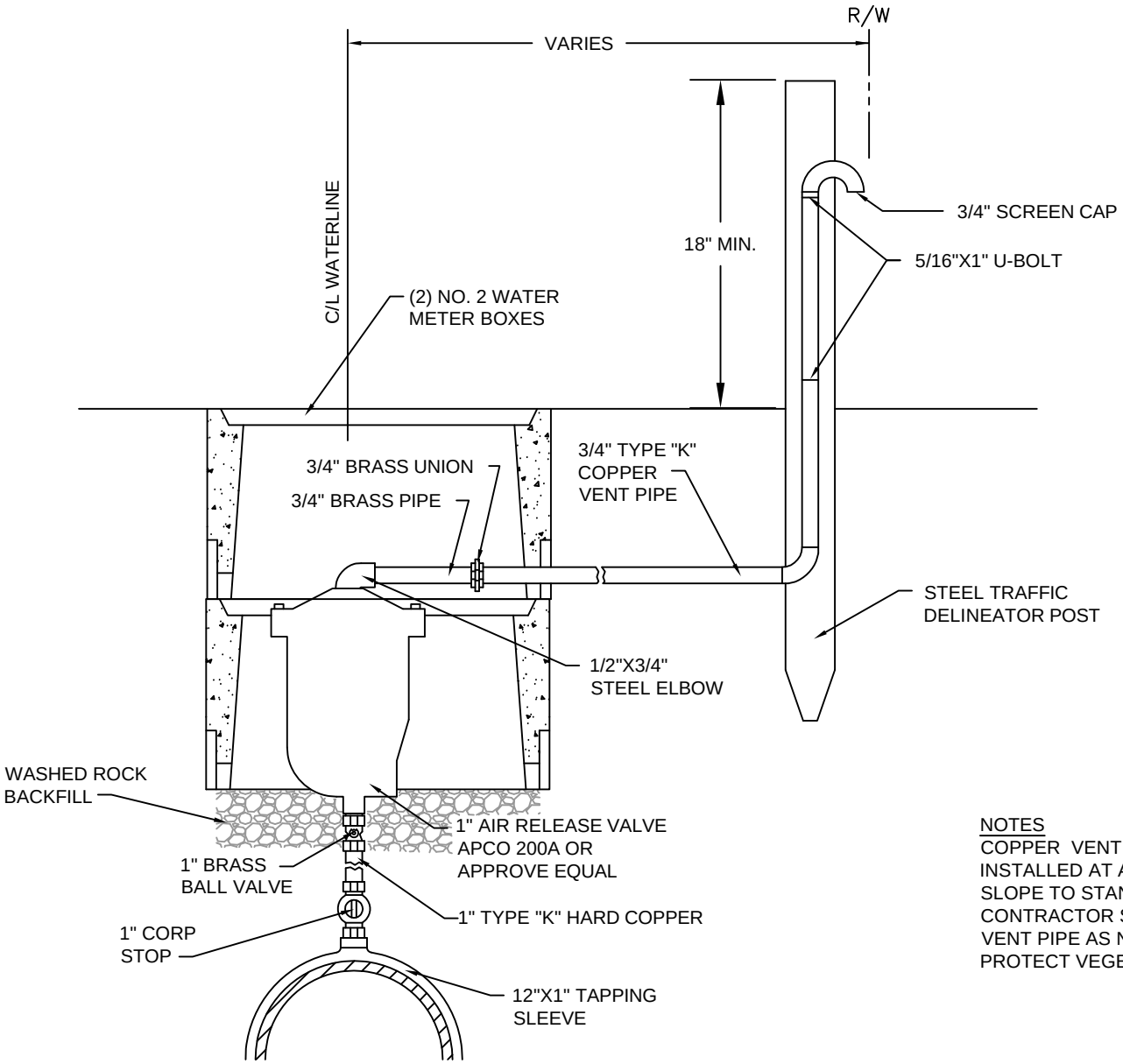

NOTES
COPPER VENT PIPE TO BE INSTALLED AT A POSITIVE SLOPE TO STAND PIPE. CONTRACTOR SHALL LOCATE VENT PIPE AS NEEDED TO PROTECT VEGETATION.

GILBERT ARIZONA	STANDARD DETAIL	1" AIR RELEASE VALVE	APPROVED TOWN ENGINEER DATE	DETAIL NO. GIL-360

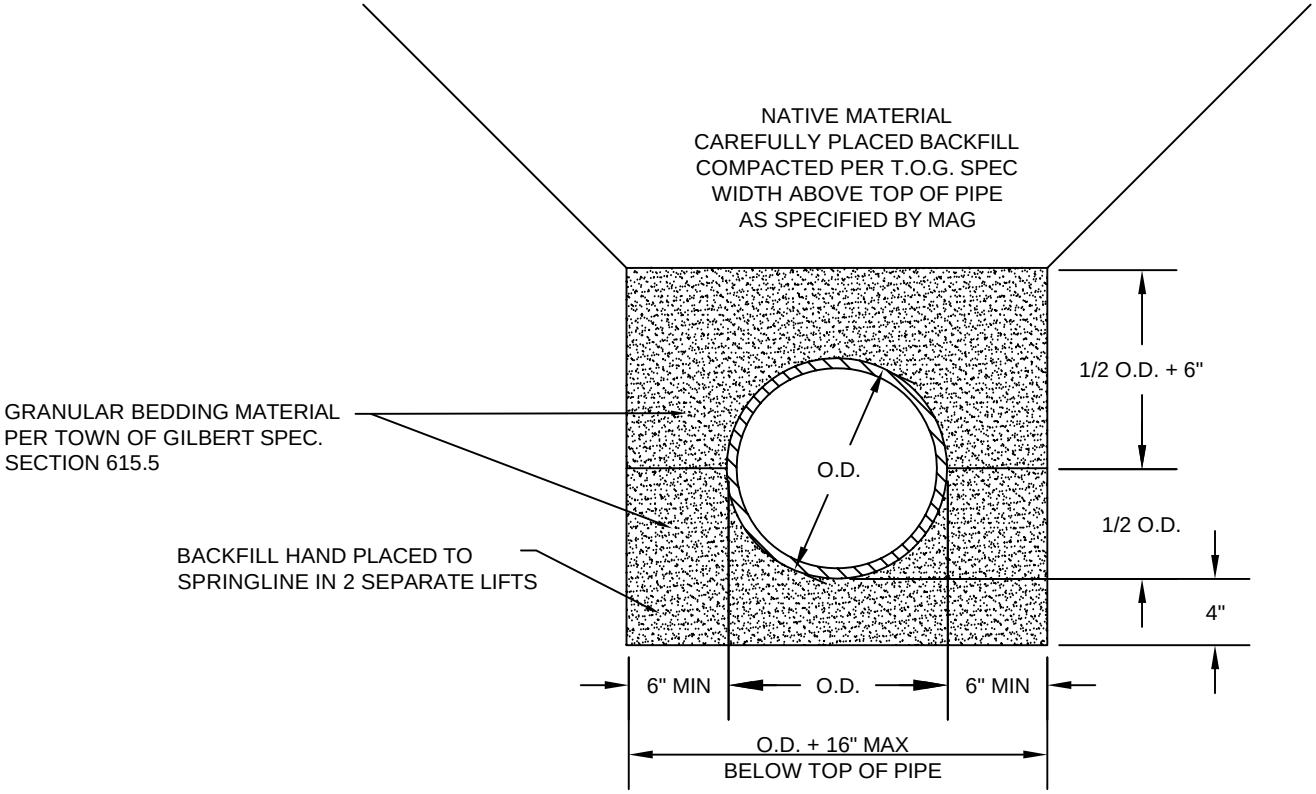

PVC SEWER PIPE BEDDING DETAIL

NTS

GILBERT ARIZONA	STANDARD DETAIL	BEDDING DETAIL PVC SEWER PIPE	APPROVED TOWN ENGINEER DATE	DETAIL NO. GIL-401

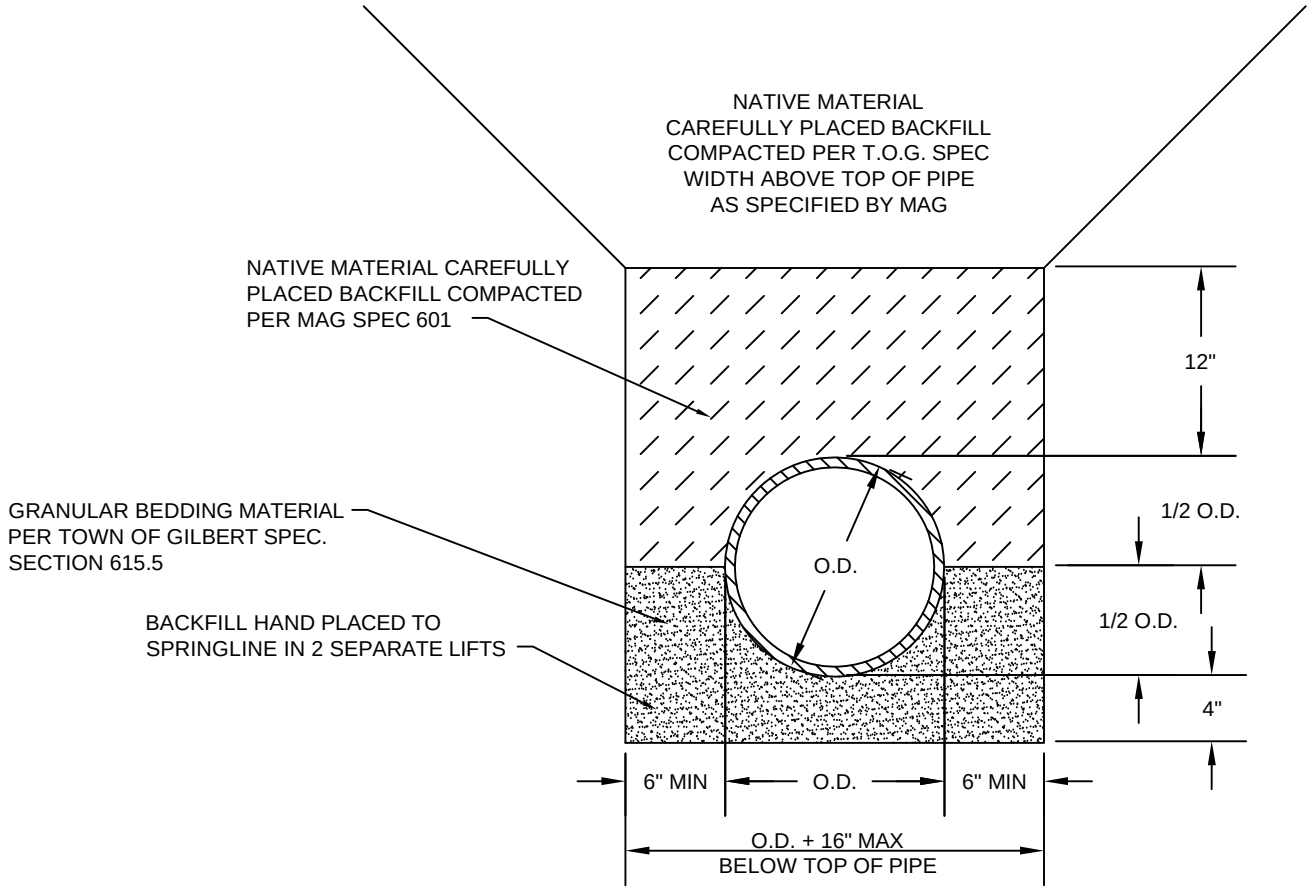

VCP SEWER PIPE BEDDING DETAIL*

NTS

* VCP TO BE USED ONLY WITH WRITTEN APPROVAL FROM THE TOWN ENGINEER

GILBERT ARIZONA	STANDARD DETAIL	BEDDING DETAIL VCP SEWER PIPE	APPROVED TOWN ENGINEER DATE	DETAIL NO. GIL-402

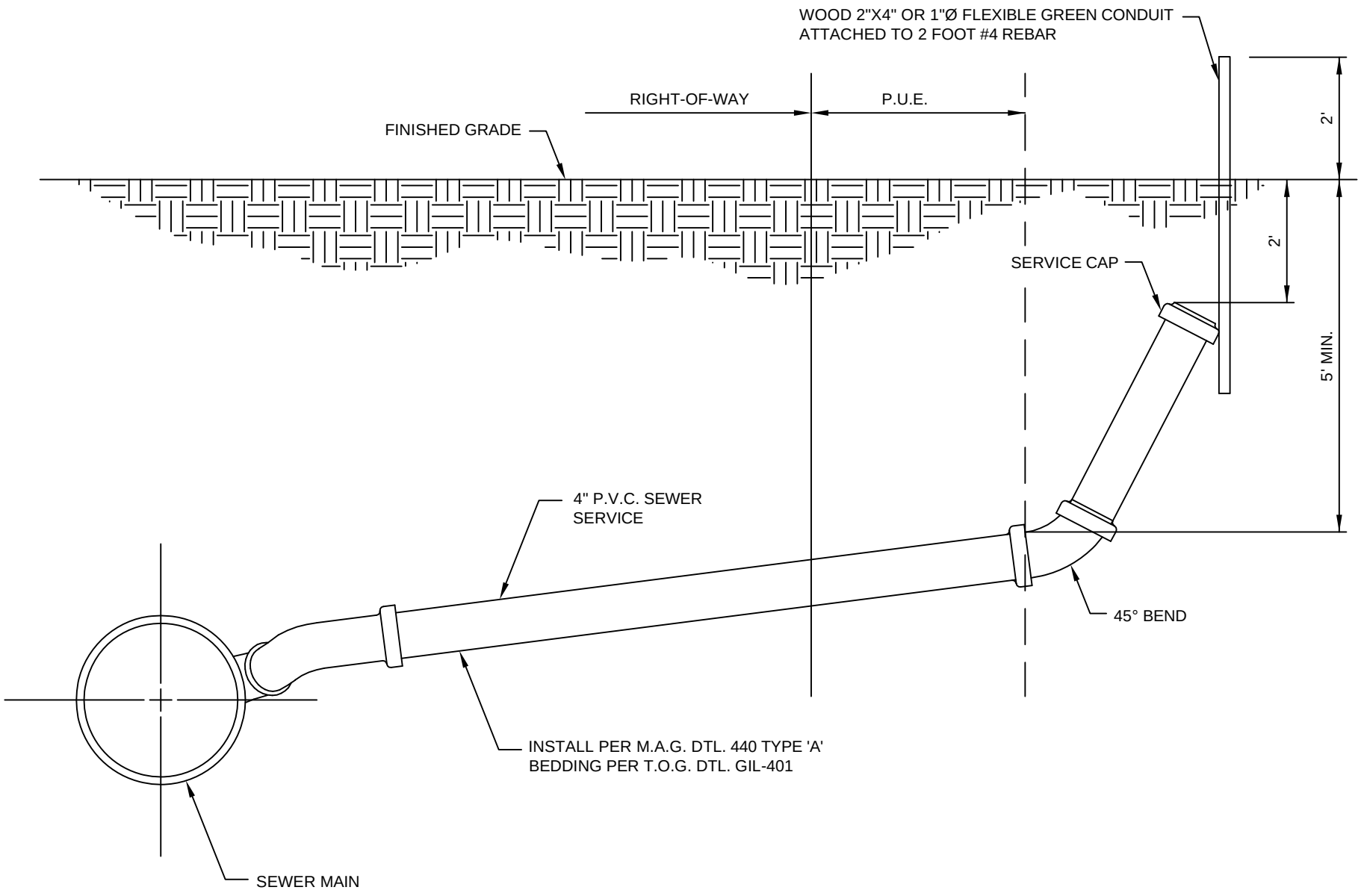

GILBERT ARIZONA	STANDARD DETAIL	4" SEWER SERVICE INSTALLATION	APPROVED TOWN ENGINEER DATE	DETAIL NO. GIL-410

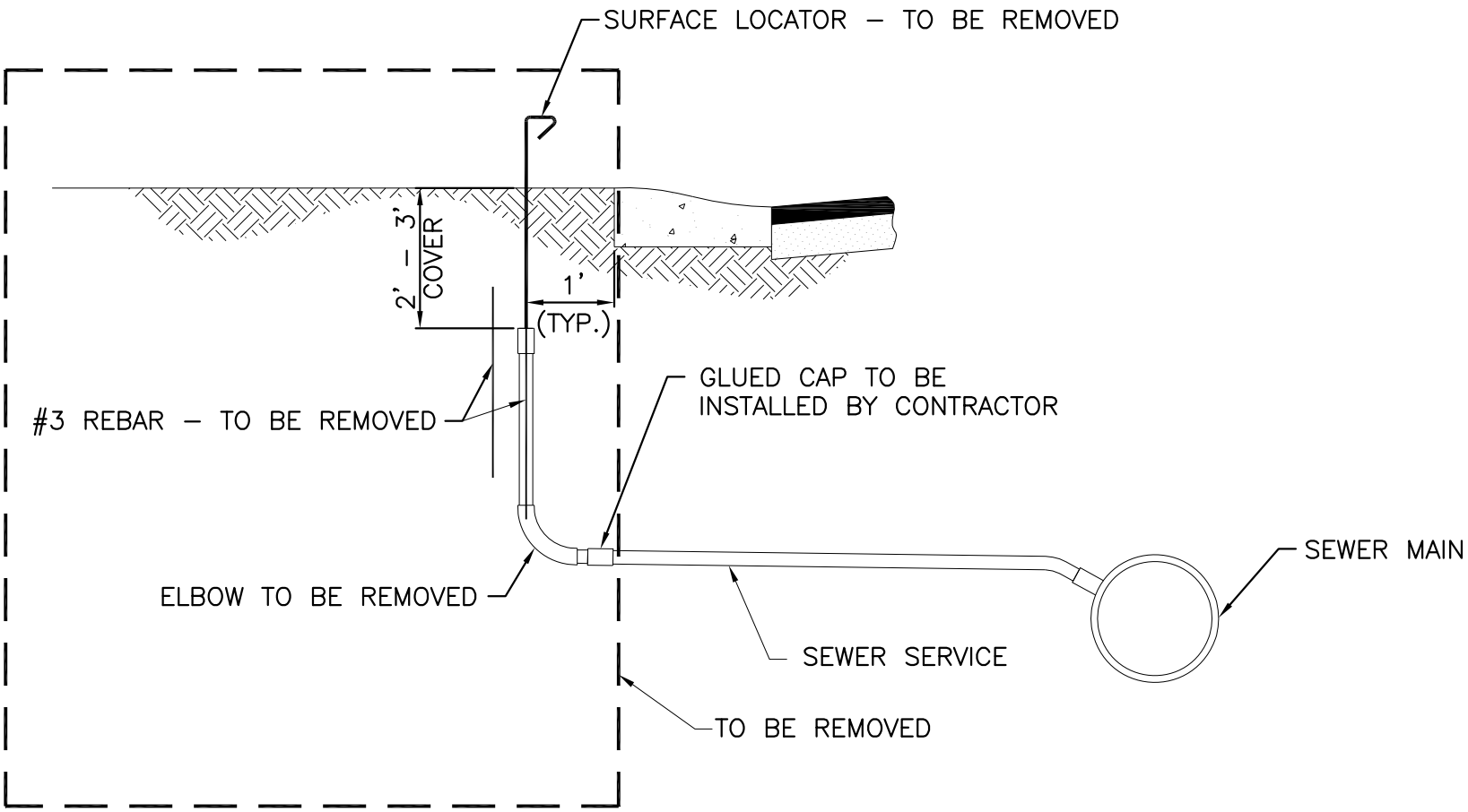

GILBERT ARIZONA	STANDARD DETAIL	4" SEWER SERVICE ABANDONMENT	APPROVED TOWN ENGINEER DATE	DETAIL NO. GIL-419

RECLAIMED WATER NOTES

1. INSTALL IN ACCORDANCE WITH MAG SECTION 616
2. USE PURPLE PIPE MARKED RECLAIMED WATER CL 200 PSI 73° F , PVC 1120 ASTM D2241, SDR 21
3. LOCATOR AND IDENTIFICATION TAPE AS SPECIFIED PER MAG SECTION 616 OR APPROVAL BY THE T.O.G.

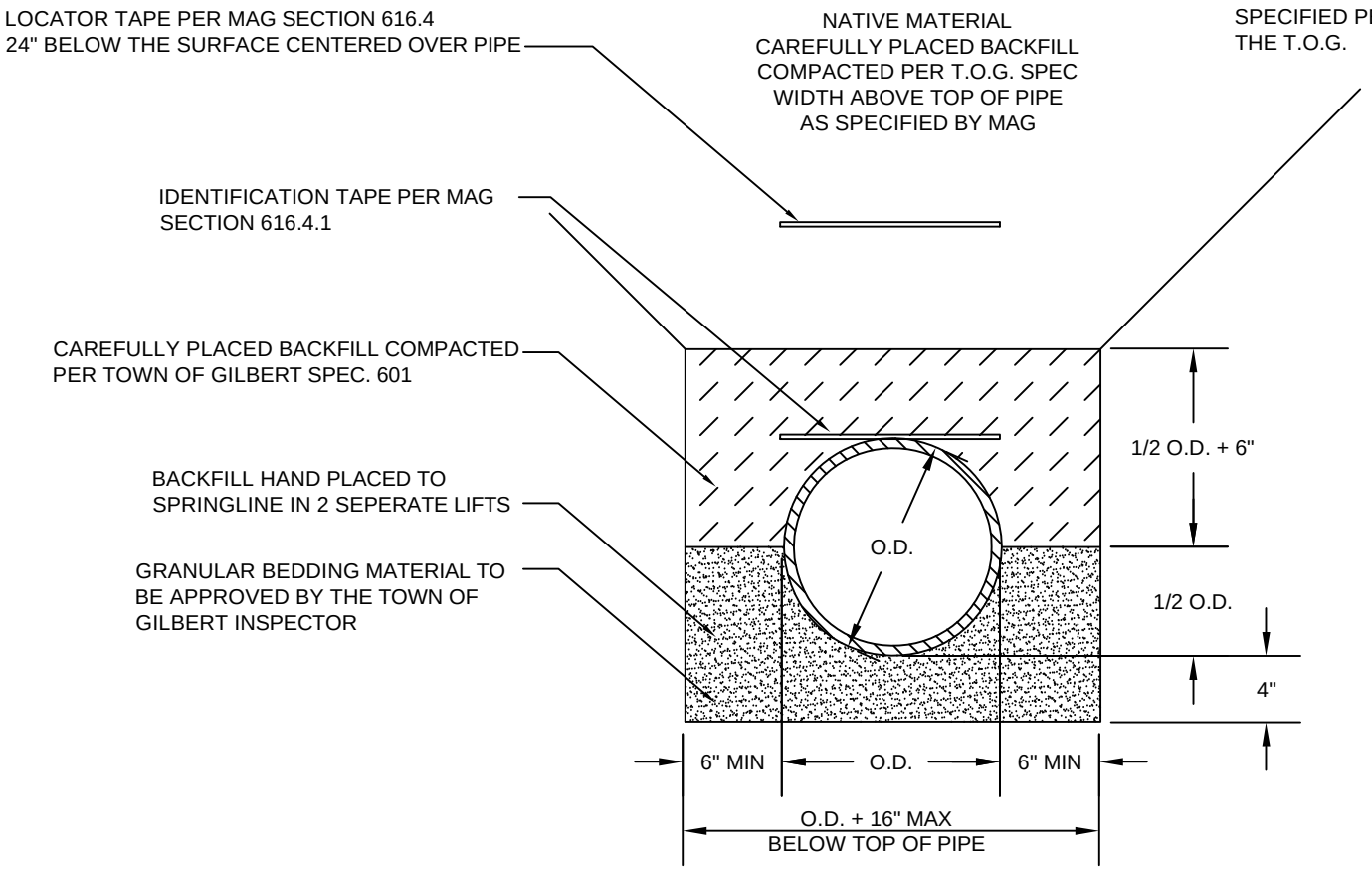

PVC RECLAIMED WATER PIPE
BEDDING DETAIL

GILBERT ARIZONA	STANDARD DETAIL	BEDDING DETAIL RECLAIMED WATER LINE	APPROVED TOWN ENGINEER DATE	DETAIL NO. GIL-701

TO BE DEVELOPED

GILBERT ARIZONA	STANDARD DETAIL	RECLAIMED MANUAL SHUTOFF VALVE	APPROVED TOWN ENGINEER DATE	DETAIL NO. GIL-710

TO BE DEVELOPED

GILBERT ARIZONA	STANDARD DETAIL	RECLAIMED VALVE LIDS	APPROVED TOWN ENGINEER DATE	DETAIL NO. GIL-715

TO BE DEVELOPED

GILBERT ARIZONA	STANDARD DETAIL	RECLAIMED WATER METERS	APPROVED TOWN ENGINEER DATE	DETAIL NO. GIL-720

TO BE DEVELOPED

GILBERT ARIZONA	STANDARD DETAIL	RECLAIMED AIR/VACUUM RELIEF VALVES	APPROVED TOWN ENGINEER DATE	DETAIL NO. GIL-730

TO BE DEVELOPED

GILBERT ARIZONA	STANDARD DETAIL	RECLAIMED AUTOMATED TURNOUTS	APPROVED TOWN ENGINEER DATE	DETAIL NO. GIL-740

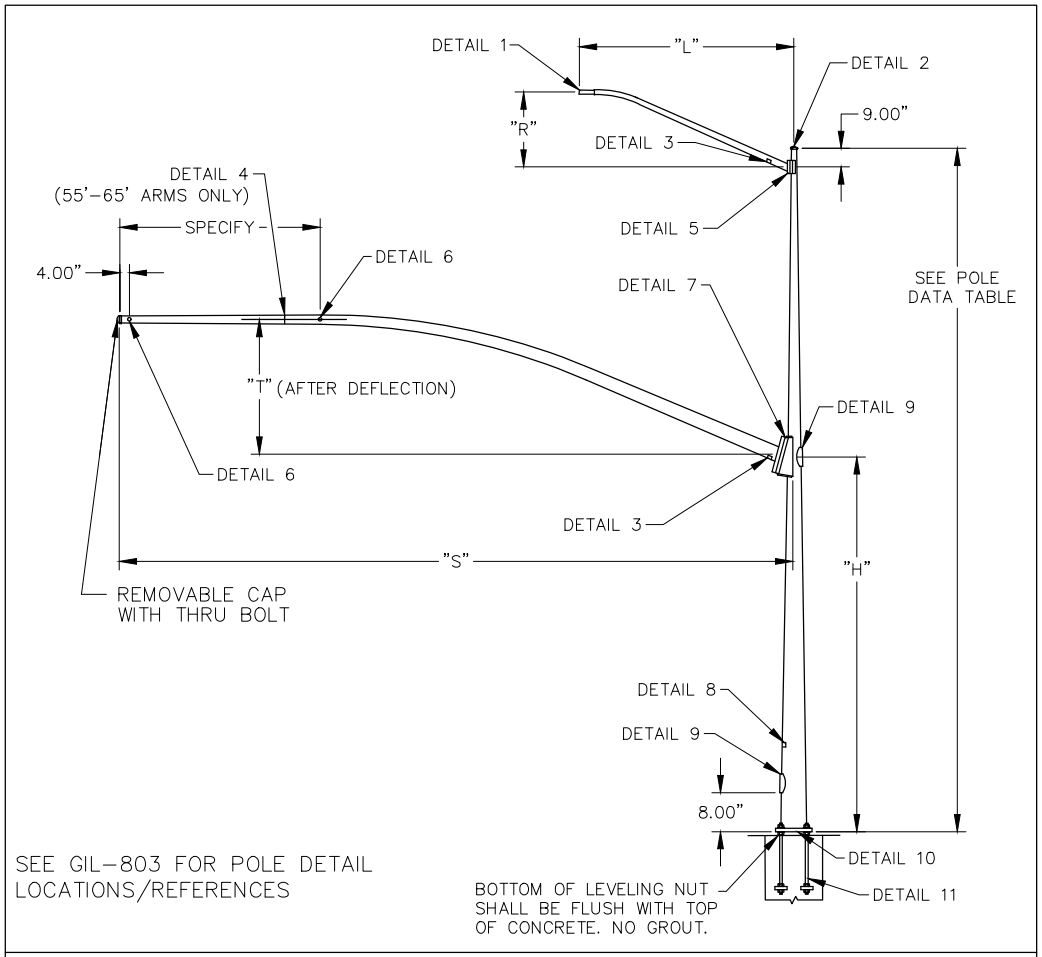

SEE GIL-803 FOR POLE DETAIL LOCATIONS/REFERENCES

TYPES Q, R, & W ARIZONA POLE SERIES

ALL POLE UPRIGHTS SHALL HAVE A HAND HOLE BEHIND THE SIGNAL MAST ARM (TYPICAL)

10' DEEP FOUNDATION FOR "Q" & "R" POLES PER ADOT STD. DET. T-SL 4-13 AND T-SL 4-15, (TYPICAL)

12' DEEP FOUNDATION FOR "W" POLES PER ADOT STD. DET. T-SL 4-17, (TYPICAL)

SIGNAL ARM DATA

TYPE	ARM SPAN "S" (FT)	LARGE END DIA. (IN)	SMALL END DIA. (IN)	GAUGE OR THICK (IN)	SECTION LENGTH (FT)	RISE "T" (FT)	ARM MOUNTING HEIGHT "H" (FT)
Q	25	7.00	3.45	7	25.00	7.00	14.00
	30	8.00	3.76	7	30.00	7.00	14.00
	35	9.00	4.07	3	35.00	7.00	14.00
R	40	9.44	3.80	3	40.00	7.00	14.00
	45	11.00	4.72	7	45.00	7.00	14.00
	50	11.50	4.52	7	50.00	7.00	14.00
W	55	11.00	4.91	3	43.50	7.00	14.00
		4.79	3.20	7	11.40		
	60	12.50	5.50	3	50.00	7.00	14.00
		5.38	3.87	7	10.82		
	65	13.00	6.00	0.250	50.00	7.00	14.00
		5.88	3.67	7	15.82		

LUMINAIRE ARM DATA

ARM SPAN "L" (FT)	FIXED END DIA. (IN)	FREE END DIA. (IN)	GAUGE	LENGTH "L" (FT)	RISE "R" (FT)
6	3.31	2.40	11	6.00	2.00
8	3.61	2.40	11	8.00	2.50
10	3.93	2.40	11	10.00	3.33
12	4.23	2.40	11	12.00	4.25
15	4.65	2.40	11	15.00	4.75
18	5.10	2.40	11	18.00	5.75
20	5.90	3.00	7	20.00	5.75

DESIGN CRITERIA:

DESIGNED TO WITHSTAND PRESSURES EQUIVALENT TO 80 MPH ISOTACH WIND VELOCITY. WITH A 1.3 GUST FACTOR, AS DEFINED BY THE AASHTO "STANDARD SPECIFICATIONS FOR STRUCTURAL SUPPORTS FOR HIGHWAY SIGNS, LUMINAIRES, AND TRAFFIC SIGNALS", 1994.

POLE, BASE PLATE, ANCHOR BOLT DATA

POLE TYPE	POLE TUBE				POLE BASE				ANCHOR BOLT			
	LENGTH (FT)	BASE DIA. (IN)	TOP DIA. (IN)	WALL GA/THK	SQUARE "B" (IN)	BOLT CIRCLE "C" (IN)	THK. "D" (IN)	SLOT/HOLE SIZE "Z" (IN)	DIA. "N" (IN)	LENGTH "O" (IN)	BOTTOM THREAD LENGTH "BT" (IN)	PLATE SIZE "e" X"f" X "g" (IN)
Q	30.00	12.00	7.80	3	18.00	17.50	2.00	2.25 X 2.75	2.00	70.00	6.00	1.50 X 5.50 X 5.50
R	30.00	13.50	9.30	0.250	18.00	17.75	2.00	2.25 X 2.50	2.00	70.00	6.00	1.50 X 5.50 X 5.50
W	30.00	16.00	11.80	0.250	23.00	23.00	2.00	2.50	2.00	70.00	6.00	1.50 X 5.50 X 5.50

GILBERT ARIZONA

STANDARD DETAIL

"Q", "R", & "W" POLE DETAIL

APPROVED

TOWN ENGINEER

DATE

DETAIL NO.
GIL-801

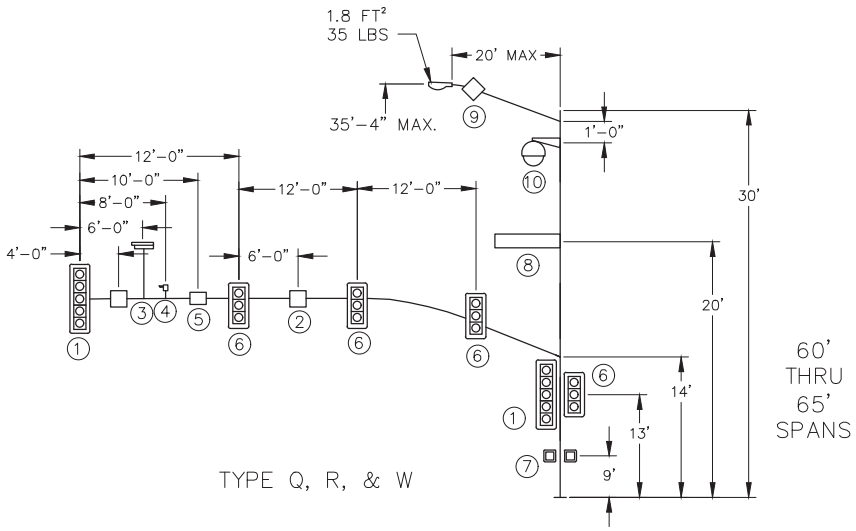

TYPE Q, R, & W

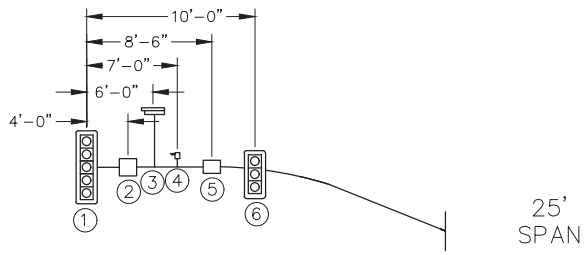

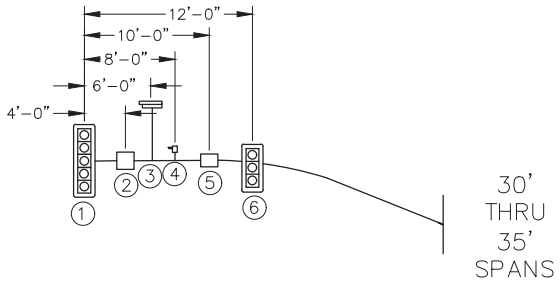

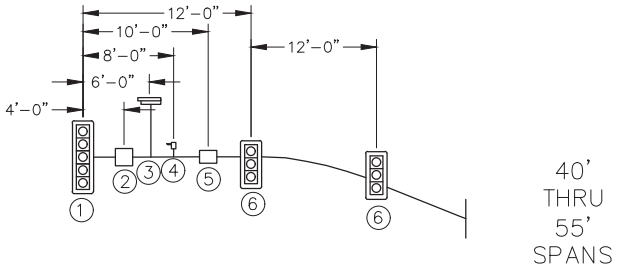

TYPE Q, R, & W

CLEARANCE TO SIGNAL HEADS ON MAST ARM

POLE	MAST ARM LENGTH	POSITION OF HEAD 1	2	3
Q	25'	17.15'	17.64'	–
	30'	17.15'	18.27'	–
	35'	17.15'	18.27'	–
R	40'	17.15'	18.27'	18.06'
	45'	17.15'	17.64'	18.02'
	50'	17.15'	18.27'	18.27'

POLE	MAST ARM LENGTH	POSITION OF HEAD 1	2	3	4
W	55'	17.15'	18.27'	18.27'	–
	60'	17.15'	18.27'	18.27'	17.70'
	65'	17.15'	18.27'	18.27'	18.27'

THE CLEARANCE TO THE SIGNAL HEADS ARE MEASURED FROM THE TOP OF THE POLE FOUNDATION TO THE BOTTOM OF THE SIGNAL ASSEMBLY i.e. THE BOTTOM OF THE SIGNAL BACKPLATES.

CONSTRUCTION NOTE

THE SIGN AT DISTANCE 18 FEET FROM MAST ARM FOR 65 FOOT MAST ARM SHALL BE INSTALLED ONLY IF TYPE 'R' OR TYPE 'Q' HEAD IS INSTALLED AT THE TIP OF THE MAST ARM.

NOTES:

* THE SIDE MOUNTED TYPE 'Q' HEAD MOUNTED ON THE SIDE OF THE POLE IS AT AN ANGLE OF 50° TO 70° FROM THE PLANE OF THE PAPER.

** THE TYPE 'F' HEADS CLOSEST TO THE POLE FOR THE 45 FT AND 50 FT. MAST ARMS ON THE 'R' POLE ARE MOUNTED BETWEEN THE BOTTOM TWO LENSES OF THE SIGNAL HEAD i.e. AT A HEIGHT OF 19.25" FROM THE BOTTOM OF THE BACK-PLATE.

*** THE SIDE MOUNTED PEDESTRIAN HEADS ARE MOUNTED WITH THE HEADS FACING APPROXIMATELY 90° WITH RESPECT TO EACH OTHER.

DEVICE	DESCRIPTION	PROJ. AREA (FT²)	WEIGHT (LBS)
1 SIGNAL	12"- 5 SECTION WITH BACKPLATES	12.90	81.0
2 SIGN	TRAFFIC SIGN	7.89	18.0
3 CAMERA	VIDEO DETECTION CAMERA-6' RISER	2.00	22.0
4 PRE-EMPT	EMERGENGY VEHICLE DETECTION	0.10	2.0
5 SENSOR	ADVANCE RADAR DETECTOR	1.00	8.0
6 SIGNAL	12"- 3 SECTION WITH BACKPLATES	8.50	49.0
7 PED SIGNAL	DUAL PEDESTRIAN SIGNAL	5.40	46.0
8 SIGN	ILLUMINATED STREET NAME SIGN	21.20	183.0
9 ANTENNA	ETHERNET ANTENNA	1.70	10.0
10 CAMERA	CCTV CAMERA	2.20	30.0

GILBERT ARIZONA

STANDARD DETAIL

"Q", "R", & "W" POLE DETAILS

APPROVED

TOWN ENGINEER

DATE

DETAIL NO.

GIL-802

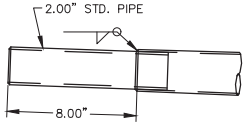

ARMS WITH 2.40" FREE END DIA. HAVE REFORMED END 2.38" O.D.X 8" LONG

DETAIL 1 | LUMINAIRE ARM END TENON

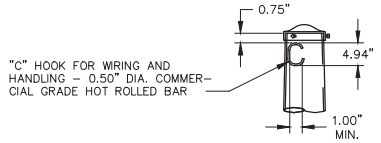

DETAIL 2 | POLE TOP

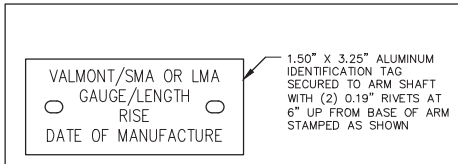

DETAIL 3 | ARM IDENTIFICATION TAG

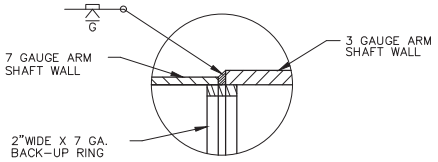

DETAIL 4 | 55'–65' SIGNAL ARM SPLICE

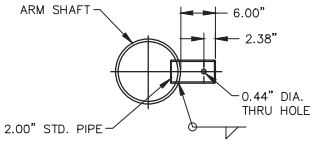

DETAIL 6 | SIGNAL ARM TENON

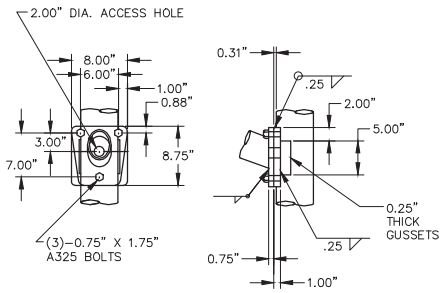

DETAIL 5 | LUMINAIRE ARM ATTACHMENT

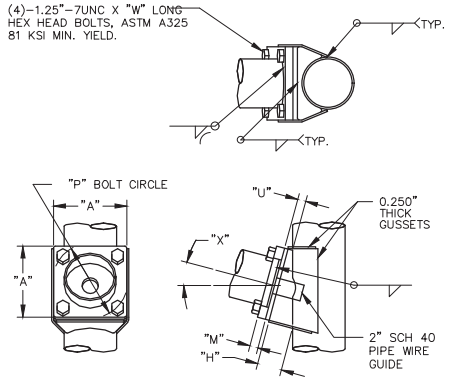

SIGNAL ARM ATTACHMENT DATA

TYPES	"A"	"P"	"M"	"U"	"W"	"X"	"H"
J & Q	13.00"	13.00"	1.25"	1.50"	3.00"	23°	5.01"
K & R	15.00"	15.00"	1.50"	1.75"	3.50"	*15°	3.80"
W	20.00"	20.00"	2.00"	2.00"	4.25"	15°	5.06"

DETAIL 7 | SIGNAL ARM ATTACHMENT

*SEE NOTE 1

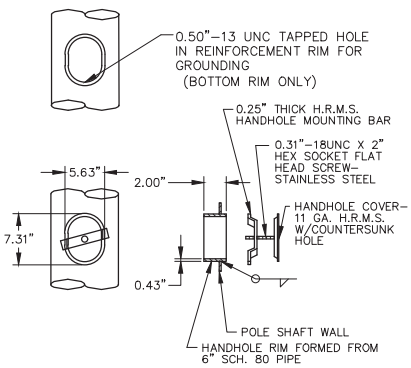

DETAIL 9 | HANDHOLE

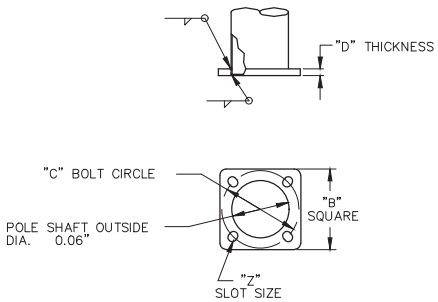

DETAIL 10 | POLE BASE

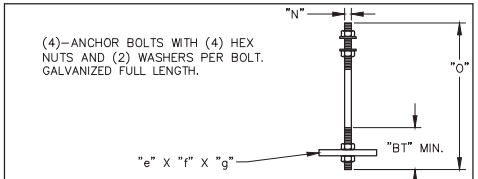

DETAIL 11 | ANCHOR BOLT

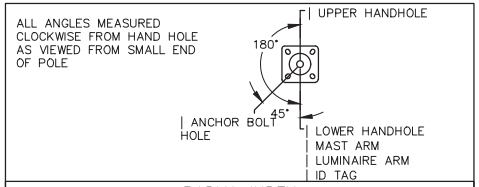

RADIAL INDEX

MATERIAL DATA

COMPONENT	ASTM DESIGNATION	MIN. YIELD (KSI)
POLE SHAFTS–7 & 3 GAUGE	A595 GR.A	55
POLE SHAFTS–0.250" WALL	A572	55 OR 65
BASE PLATE–A595 SHAFT	A36	36
BASE PLATE–A572 SHAFT	A572 GR.50	50
SIGNAL ARM ATTACHMENT	A36	36
LUMINAIRE ARM ATTACHMENT	A36	36
ANCHOR BOLTS	F1554	55
ANCHOR BOLT NUTS	A563 GR.A	
ANCHOR BOLT WASHERS	F436	
GALVANIZING–ACCESSORIES	F2329	
GALVANIZING–TUBES	A123	

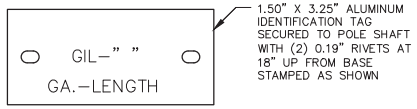

DETAIL 8 | POLE IDENTIFICATION TAG

NOTE:
1. 40' SIGNAL MAST ARM TO BE SKEWED 8 DEGREES ON SIMPLEX PLATE IN ORDER TO ACHIEVE 23 DEGREE RISE IN ARM WHEN ATTACHED TO POLE SIMPLEX WITH 15 DEGREE RISE.
2. ALL POLES AND MAST ARMS SHALL BE HOT DIP GALVANIZED.
3. ALL POLES AND MAST ARMS SHALL BE PAINTED PER TOWN OF GILBERT REQUIREMENTS.

SEE GIL–801 FOR POLE DETAIL, BASE PLATE, ANCHOR BOLT TABLE/DIMENSIONS

GILBERT ARIZONA	STANDARD DETAIL	"Q", "R", & "W" POLE DETAILS	APPROVED TOWN ENGINEER DATE	DETAIL NO. GIL-803

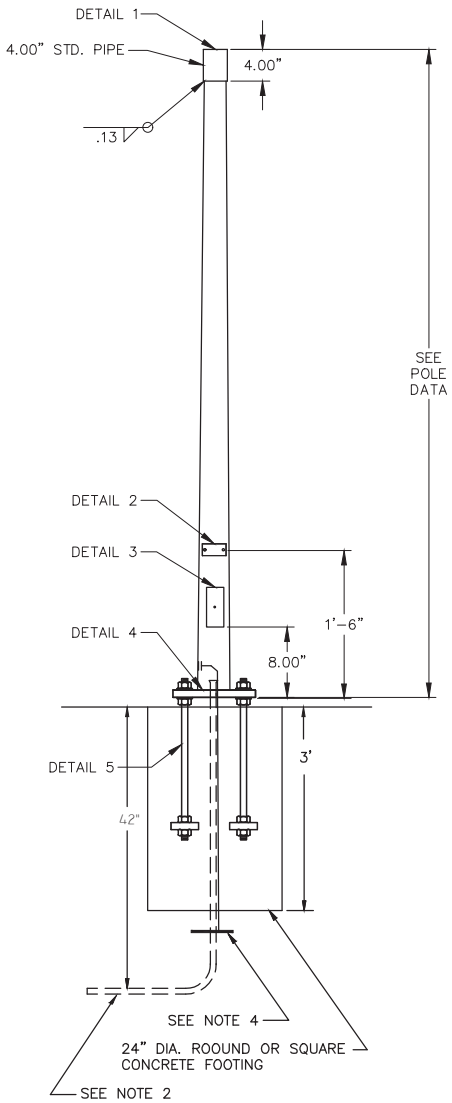

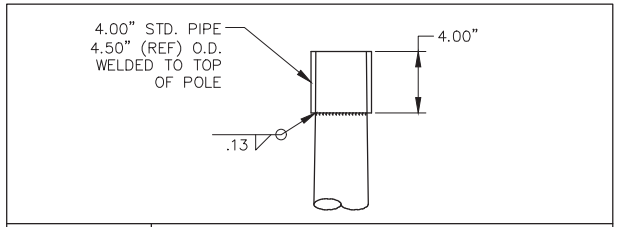

DETAIL 1 — POLE TOP TENON

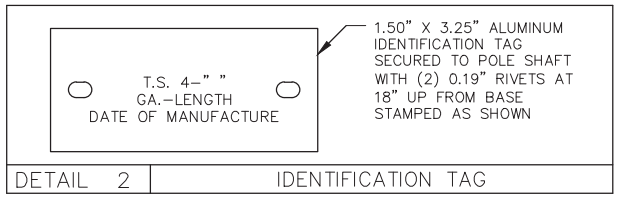

DETAIL 2 — IDENTIFICATION TAG

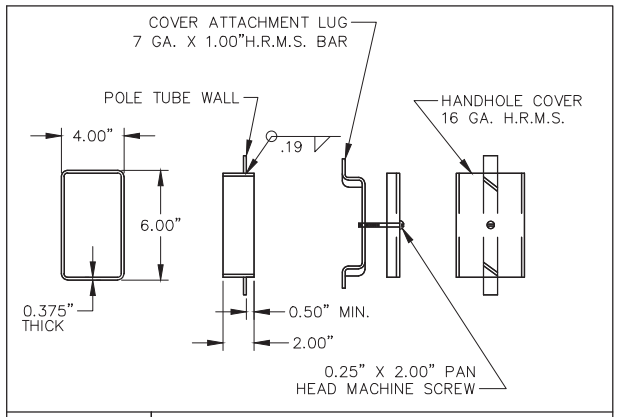

DETAIL 3 — TYPE A-1 HANDHOLE

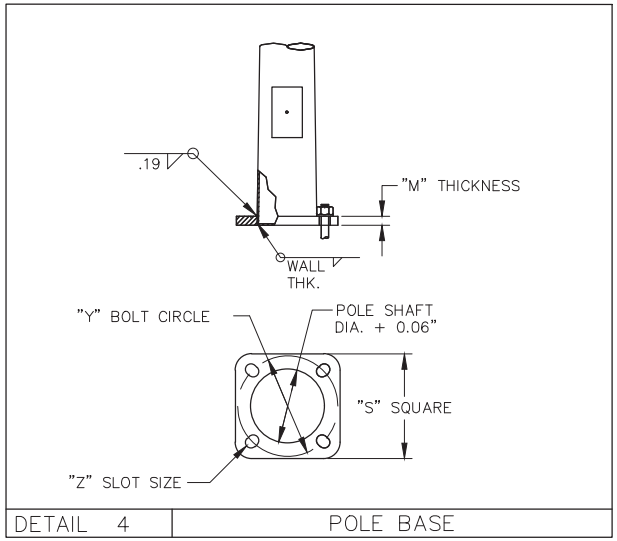

DETAIL 4 — POLE BASE

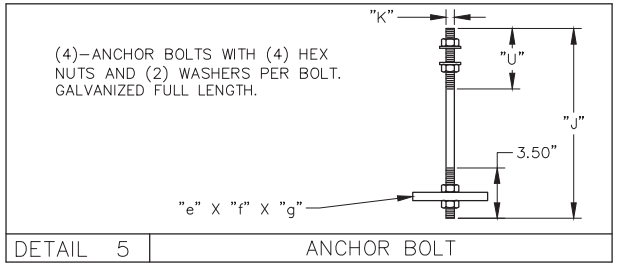

DETAIL 5 — ANCHOR BOLT

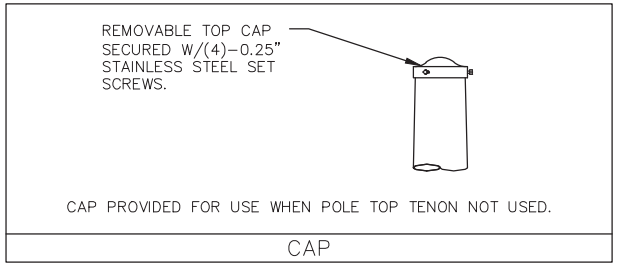

CAP

TYPE A POLE DATA

ITEM	POLE TUBE				POLE BASE				ANCHOR BOLT			
	BASE DIA.(IN)	TOP DIA. (IN)	LENGTH (FT)	GAUGE OR THICK (IN)	SQUARE "S"(IN)	BOLT CIRCLE "Y"(IN)	THK. "M"(IN)	SLOT "Z" (IN)	DIA. "K" (IN)	LENGTH "J"(IN)	THREAD LENGTH "U" (IN)	PLATE SIZE "e" X "f" X "g" (IN)
TYPE A	5.81	4.13	12.00	11	10.50	10.50	1.000	1.25 X 2.25	1.00	35.00	8.00	0.75 x 2.75 x 2.75

MATERIAL DATA

COMPONENT	ASTM DESIGNATION	MIN. YIELD (KSI)
TAPERED POLE TUBE	A595 GR A	55
NONTAPERED POLE TUBE	A500 GR.B	42
POLE BASE	A36	36
ANCHOR BOLTS	F1554	55
GALVANIZING-HARDWARE	F2329	

FINISH

SYSTEM: GALVANIZED (GV)
BASE COAT: HOT-DIP GALVANIZED TO ASTM A123
PRIME COAT: NONE
FINISH COAT: NONE
COLOR: NONE
SPEC: F-1

SEE PROJECT NOTES FOR FINAL POLE COLOR AFTER INSTALLATION.

GENERAL NOTES

1. ALL DIMENSIONS ARE IN ENGLISH UNITS.
2. INSTALL A SINGLE 2" PVC CONDUIT IN FOUNDATION AT 42" DEPTH.
3. ANCHOR BOLTS SHALL PROJECT 3 1/2" ABOVE THE FINISHED SIDEWALK.
4. A 25' COIL OF #8 BARE COPPER CONDUCTOR SHALL BE INSTALLED BEFORE CONCRETE IS POURED AND CONNECTED TO THE POLE GROUNDING LUG IN THE HAND HOLE. THE GROUND COIL SHALL BE COVERED WITH 6" OF FILL.

GILBERT ARIZONA

STANDARD DETAIL

TYPE "A-1" POLE DETAILS

APPROVED

TOWN ENGINEER

DATE

DETAIL NO.
GIL-804

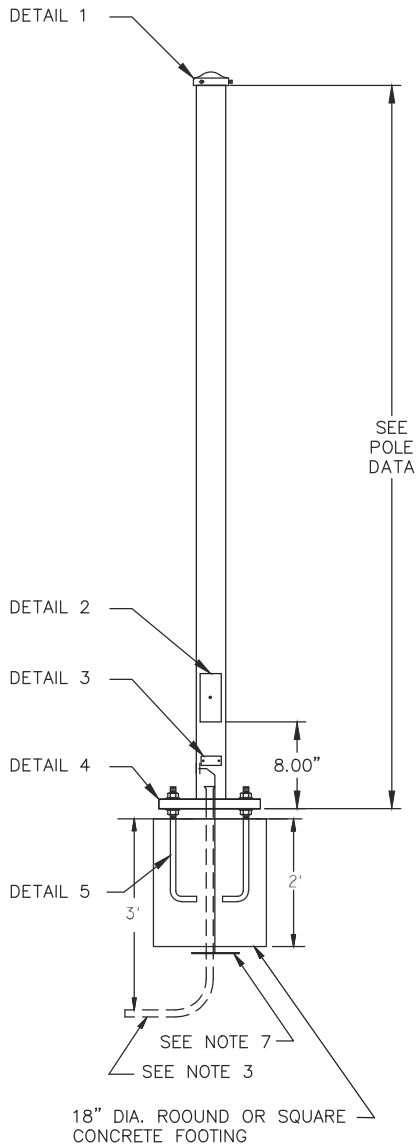

BIKE/PEDESTRIAN POLE GENERAL NOTES

1. ALL DIMENSIONS ARE IN ENGLISH UNITS.
2. ALL BIKE/PEDESTRIAN POLES MAY BE OF THE STRAIGHT OR TAPERED TYPE, WALL THICKNESS SHALL NOT EXCEED 0.125". POLE O.D. SHALL BE 4.00".
3. INSTALL A SINGLE 2" PVC CONDUIT IN FOUNDATION AT 36" DEPTH.
4. ANCHOR BOLTS SHALL BE 3/4" X 18" J-BOLTS, EACH ANCHOR BOLT SHALL HAVE TWO HEX NUTS AND TWO FLAT WASHERS.
5. ANCHOR BOLTS SHALL PROJECT 3 1/2" ABOVE THE FINISHED SIDEWALK.
6. A STAINLESS STEEL TAG SHALL BE PERMANENTLY ATTACHED TO THE POLE 4" ABOVE THE POLE BASE STATING THE MANUFACTURER'S NAME, TOG POLE TYPE AND DATE MANUFACTURED.
7. A 25' COIL OF #8 BARE COPPER CONDUCTOR SHALL BE INSTALLED BEFORE CONCRETE IS POURED AND CONNECTED TO THE POLE GROUNDING LUG IN THE HAND HOLE. THE GROUND COIL SHALL BE COVERED WITH 6" OF FILL.

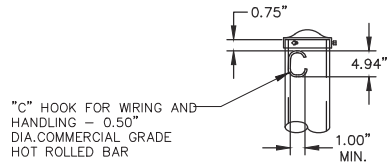

DETAIL 1 — POLE TOP

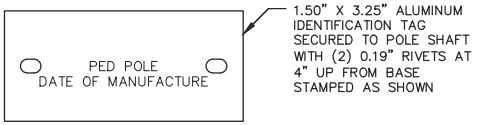

DETAIL 3 — IDENTIFICATION TAG

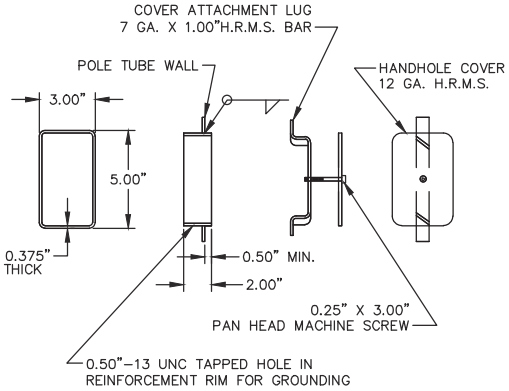

DETAIL 2 — HANDHOLE

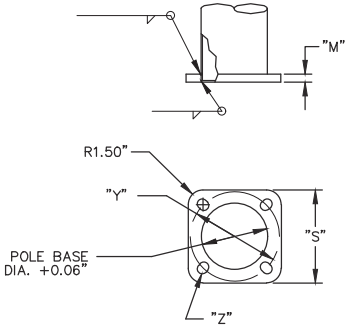

DETAIL 4 — POLE BASE

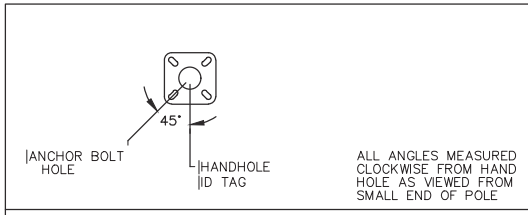

RADIAL INDEX

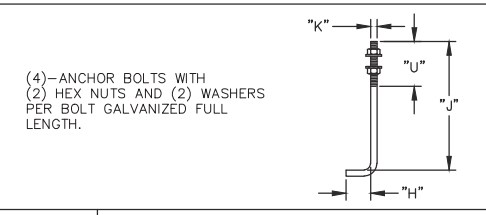

DETAIL 5 — ANCHOR BOLT

POLE DATA

POLE TYPE	POLE TUBE				POLE BASE				ANCHOR BOLT			
	BASE DIA. (IN)	TOP DIA. (IN)	LENGTH (FT)	GAUGE OR THK. (IN)	SQUARE "S" (IN)	BOLT CIRCLE "Y" (IN)	THK. "M" (IN)	SLOT "Z" (IN)	DIA. "K" (IN)	LENGTH "J" (IN)	HOOK "H" (IN)	THREAD LENGTH "U" (IN)
PB (PED)	4.00	4.00	5.50	0.120	10.50	10.50	0.500	1.00 X 2.00	0.75	18.00	3.00	4.00

MATERIAL DATA

COMPONENT	ASTM DESIGNATION	MIN. YIELD (KSI)
POLE TUBE	A500 GR.B	42
POLE BASE	A36	36
ANCHOR BOLTS	F1554	55
GALVANIZING-STRUCTURE	A123	
GALVANIZING-HARDWARE	F2329	

GILBERT ARIZONA

STANDARD DETAIL

BICYCLE / PEDESTRIAN PUSH BUTTON POLE

APPROVED

TOWN ENGINEER — DATE

DETAIL NO.
GIL-805

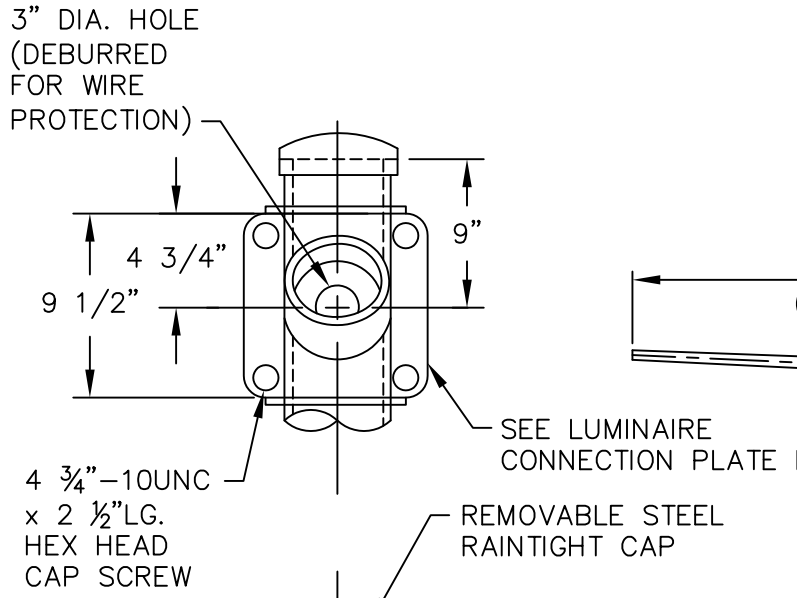

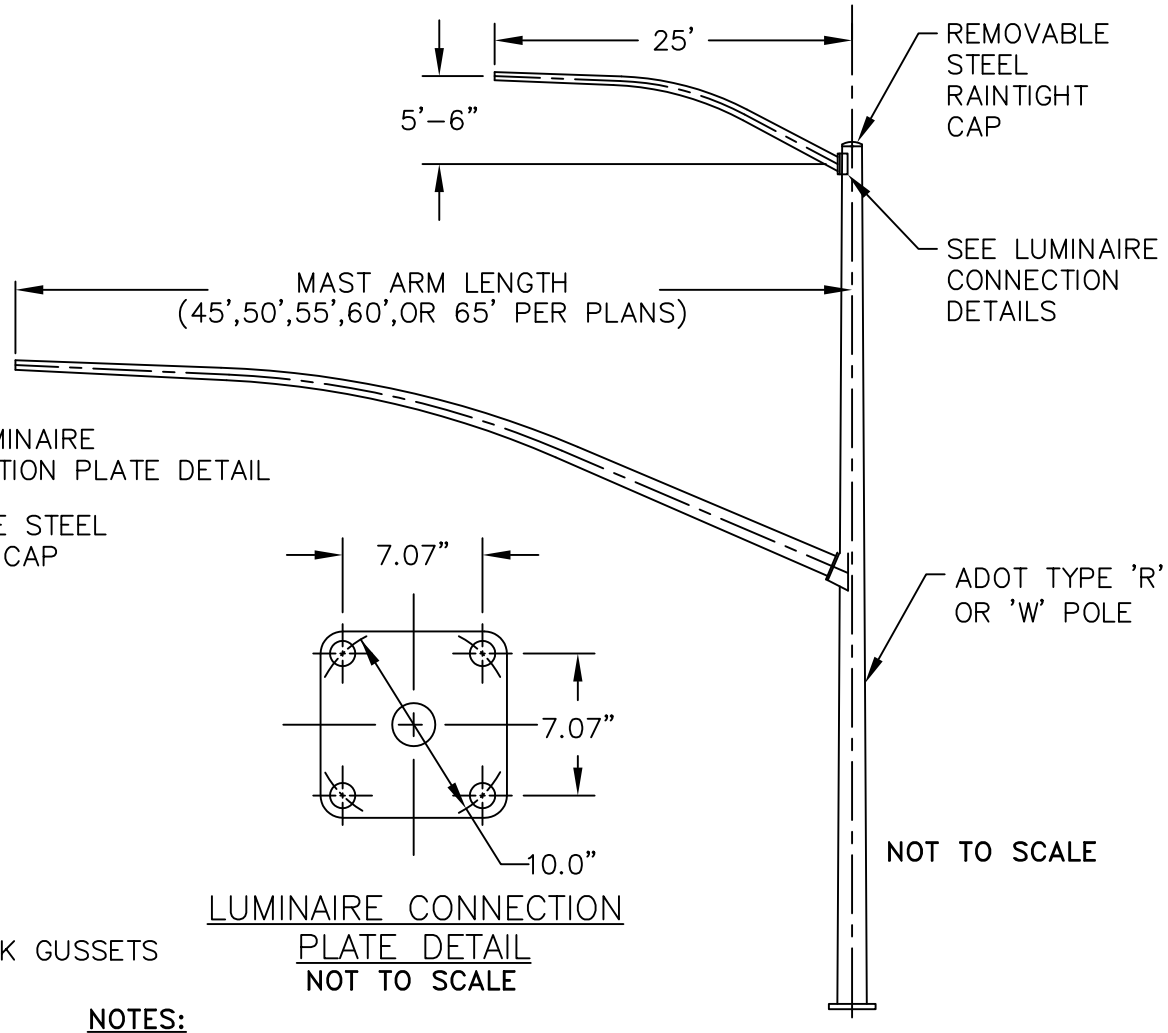

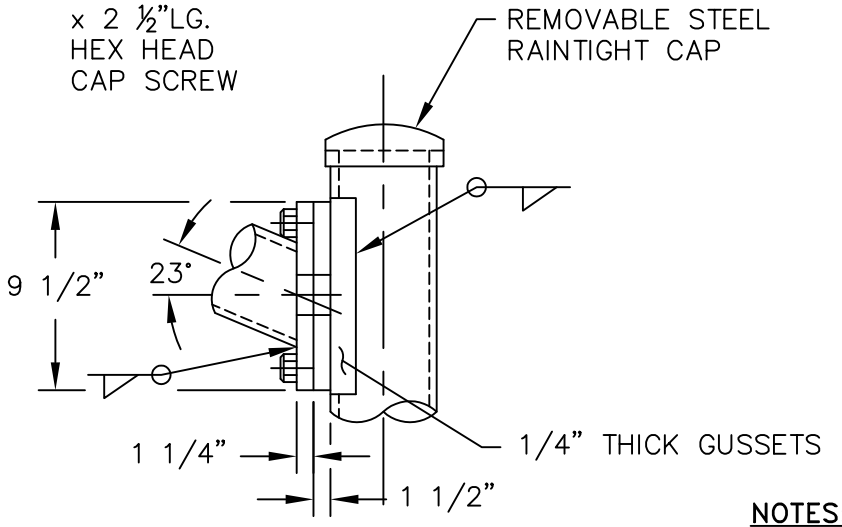

LUMINAIRE
CONNECTION DETAILS
NOT TO SCALE

LUMINAIRE CONNECTION
PLATE DETAIL
NOT TO SCALE

NOTES:

1. REQUIREMENTS FOR MAST ARMS, POLES, FOUNDATIONS AND ANCHOR BOLTS SHALL BE AS DEFINED BY THE ADOT TRAFFIC SIGNALS AND LIGHTING STANDARD DRAWINGS.
2. POLE/MAST ARM SUPPLIER SHALL PROVIDE SEALED SHOP DRAWINGS TO THE TOWN OF GILBERT FOR POLES AND MAST ARMS INSTALLED WITHIN THE TOWN.
3. THE FOUR–BOLT PATTERN OF THE LUMINAIRE CONNECTION PLATE SHALL BE SPACED 7.07 INCHES ON CENTER VERTICALLY AND HORIZONTALLY.

GILBERT ARIZONA	STANDARD DETAIL	25' LUMINAIRE MAST ARM	APPROVED TOWN ENGINEER / DATE	DETAIL NO. GIL-810

NOTES:

1. PHASE 2 IS ALWAYS NORTHBOUND REGARDLESS OF STREET CLASSIFICATION.

2. VIDEO DETECTION SHALL BE SUPPLIED AND INSTALLED BY THE CONTRACTOR IN ACCORDANCE WITH THE SPECIAL PROVISIONS. THE MATERIALS AND CONSTRUCTION SHALL COMPLY WITH TOG STANDARD SPECIFICATIONS FOR VIDEO DETECTION. THE CONTRACTOR SHALL VERIFY MOUNTING LOCATIONS WITH TOWN OF GILBERT PRIOR TO INSTALLATION.

3. ALL CAMERAS SHALL BE MOUNTED WITH 6' EXTENSION BRACKETS ON THE SIGNAL MAST ARM UNLESS PRIOR PERMISSION IS GRANTED BY THE TOWN OF GILBERT.

4. DETAILS ON EQUIPMENT SPECIFIED IN TRAFFIC SIGNAL PLANS.

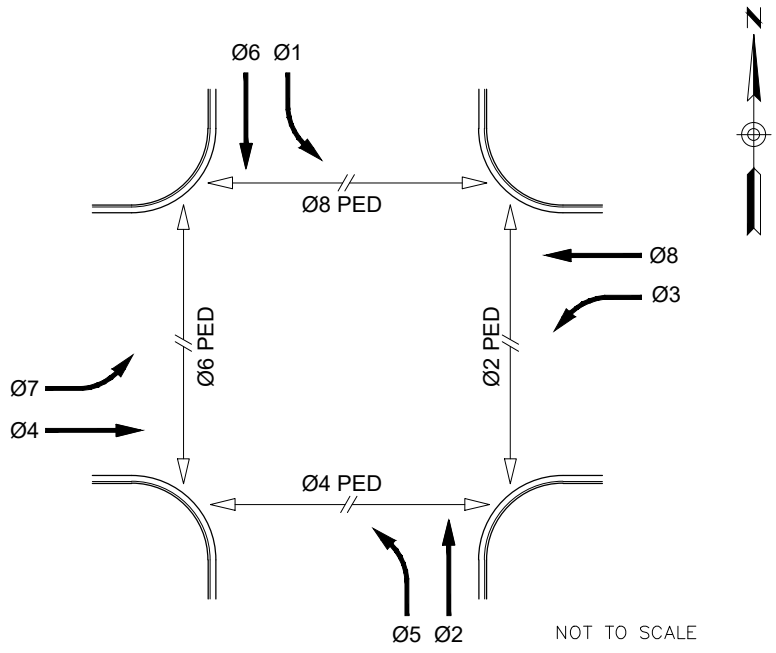

TYPICAL SIGNAL PHASING

GILBERT ARIZONA	STANDARD DETAIL	STANDARD VIDEO DETECTION DETAIL	APPROVED TOWN ENGINEER DATE	DETAIL NO. GIL-823

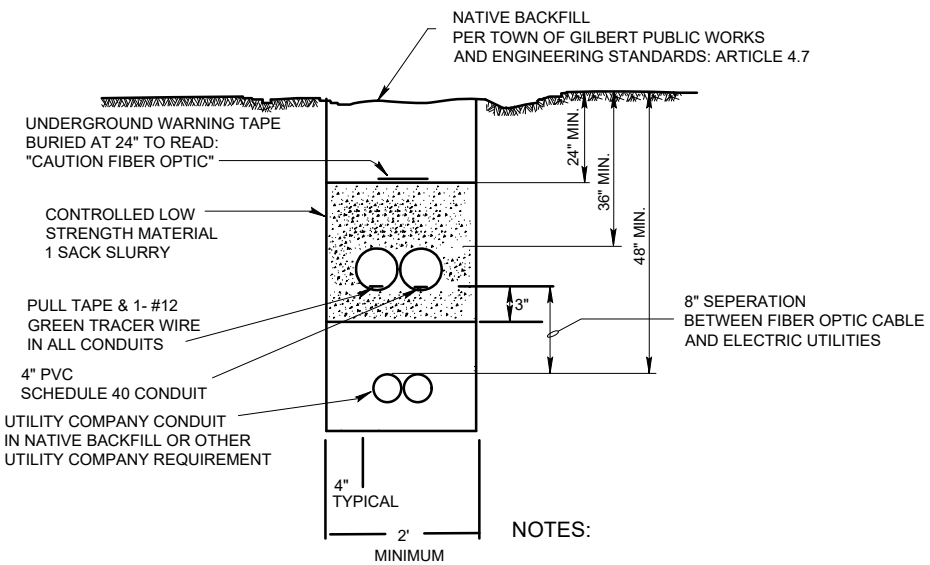

JOINT TRENCH DETAIL
UTILITY BELOW INTERCONNECT

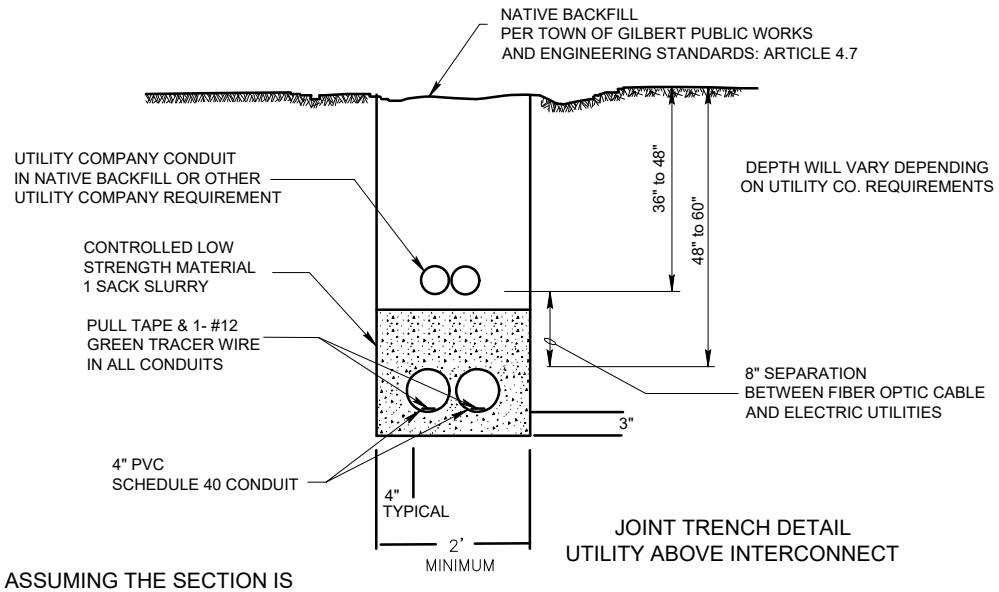

JOINT TRENCH DETAIL
UTILITY ABOVE INTERCONNECT

NOTES:

1. CONDUIT CONTENTS ARE ORIENTED ASSUMING THE SECTION IS FACING IN THE DIRECTION OF TRAVEL FOR THE ARTERIAL STREET.
2. ALL SPOIL MATERIALS SHALL BE REMOVED OFFSITE BY THE CONTRACTOR.
3. AREA SHALL BE RETURNED TO EXISTING GRADE.
4. CONDUIT COUPLINGS SHALL BE STAGGERED.
5. INSTALL 2500 LB PULL TAPE AND 1- #12 GREEN TRACER WIRE IN ALL CONDUITS. ALL TRACER WIRES SHALL BE SPLICED TOGETHER WITH A PIGTAIL BONDED TO GROUND ROD IN EACH PULL BOX.

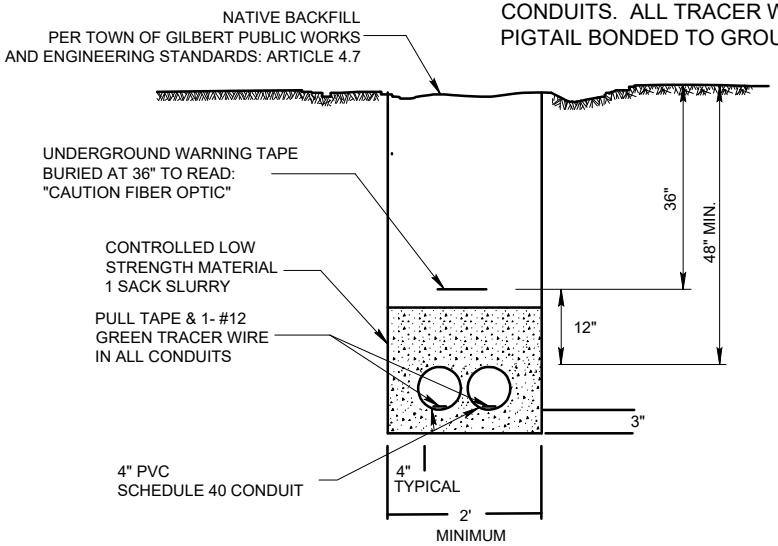

INTERCONNECT TRENCH DETAIL

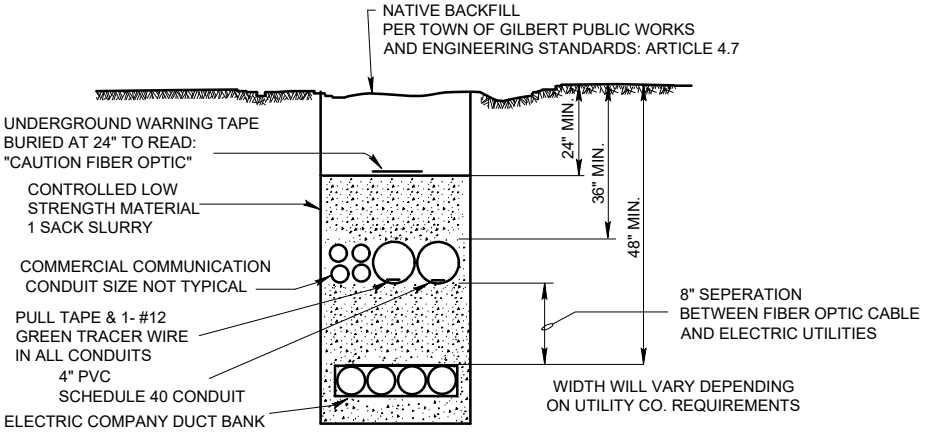

JOINT TRENCH DETAIL
UTILITY DUCT BANK

GILBERT ARIZONA	STANDARD DETAIL	INTERCONNECT TRENCHING AND JOINT UTILITY TRENCHING DETAIL	APPROVED TOWN ENGINEER DATE	DETAIL NO. GIL-831

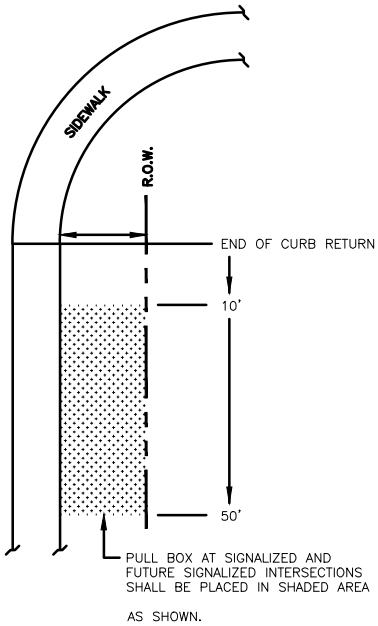

TYPICAL PULL BOX LOCATION AT INTERSECTION

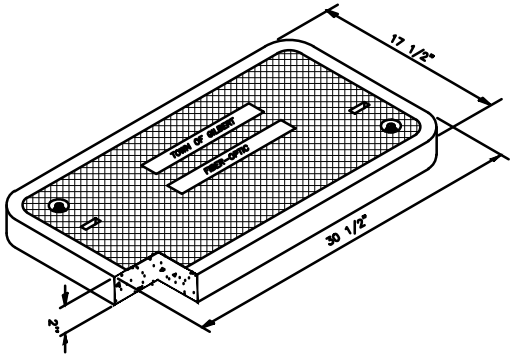

PULL BOX LID DETAIL (SEE NOTE 3)

NOTE: REFER TO GIL-843 FOR ACCEPTED PULL BOXES.

GENERAL NOTES:

1. WHEN NEW STREETLIGHT CONDUIT IS BEING INSTALLED, THE CONDUIT FOR THE FIBER-OPTIC CABLE SHALL SHARE A COMMON TRENCH WITH THE STREETLIGHT CONDUIT.
2. REFER TO DETAIL GIL-842 FOR PULL BOX INSTALLATION.
3. PULL BOX LID SHALL BE #7 CHRISTY "FIBRELYTE" (PART NUMBER FL36T) OR APPROVED EQUAL. PULL BOX COVER LETTERING SHALL BE 1" LETTERS CAST IN STANDARD MARKINGS "TOWN OF GILBERT FIBER-OPTIC"
4. PULL BOXES SHALL BE SPACED APPROXIMATELY 1,000 FEET APART
5. CABLE SHALL BE SUPPLIED ON 6000 FOOT REELS.
6. CABLE SHALL BE INSTALLED AS ONE CONTINUOUS PIECE WITH NO SPLICES INSIDE # 7 PULL BOXES.
7. ONE (1) GALLON OF WIRE PULLING "SOAP" SHALL BE USED PER 660 FEET WHEN PULLING CABLE.
8. CONDUITS FOR FIBER SYSTEM SHALL BE BLOWN OUT WITH COMPRESSED AIR AND HAVE AN 8" LONG METAL DISK MANDREL PULLED THROUGH BEFORE FIBER CABLE IS INSTALLED.
9. CONTRACTOR SHALL PERFORM AN "OTDR" (OPTICAL TIME-DOMAIN REFLECTOMETER) TEST AND A POWER METER TEST AS CALLED OUT IN THE TOWN OF GILBERT FIBER OPTIC SPECIAL PROVISIONS, ON ALL FIBERS WITH THE TRAFFIC OPERATIONS STAFF PRESENT BEFORE FINAL ACCEPTANCE. OPERATOR SHALL BE QUALIFIED TO PERFORM TEST. WRITTEN TEST RESULTS SHALL BE PROVIDED TO TECHNICIAN AS TO RESULTS OF EACH FIBER TESTED.
10. INSTALL 2500 LB PULL TAPE AND 1-#12 GREEN TRACER WIRE IN ALL CONDUITS. ALL TRACER WIRES SHALL BE SPLICED TOGETHER WITH A PIGTAIL BONDED TO GROUND ROD IN EACH PULL BOX.
11. SUPPLIERS AND/OR PART NUMBERS OTHER THAN THOSE NOTED BELOW MUST BE PRE-APPROVED BY THE TOWN OF GILBERT TRAFFIC OPERATIONS STAFF.
FIBER OPTIC CABLE:

APPROVED SUPPLIER:	CORNING
PART NUMBER:	373-COR8.3LTD-144
DESCRIPTION:	FREEDM LOOSE TUBE, GEL-FREE CABLE, RISER, 144 FIBER, SINGLE-MODE (OS2)
FIBER:	144 STRANDS SMFO 1310/1550 NM
JACKET:	INDOOR/OUTDOOR POLYETHYLENE, BLACK.
PULL TAPE:	NEPTCO WP2500P

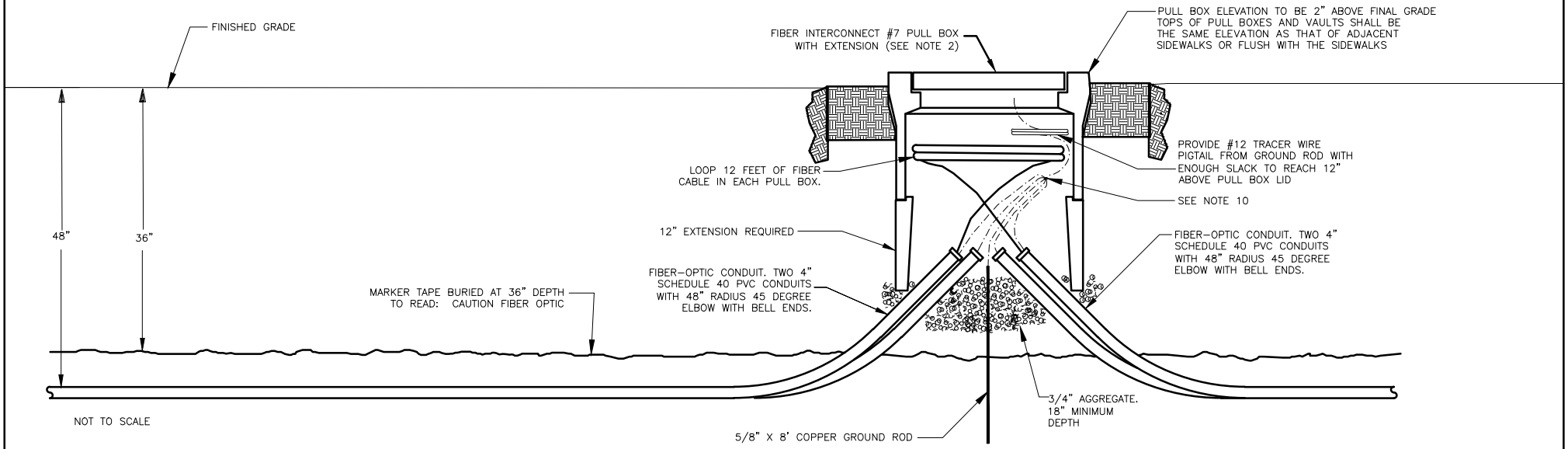

NOT TO SCALE

GILBERT ARIZONA	STANDARD DETAIL	NO. 7 PULL BOX TYPICAL INSTALLATION FOR FIBER INTERCONNECT	APPROVED TOWN ENGINEER — DATE	DETAIL NO. GIL-841

GENERAL NOTES:

1. ALL FINISHED TRAFFIC SIGNAL EQUIPMENT (POLE FOUNDATIONS, PULL BOXES, AND CONTROLLER CABINET PADS) SHALL BE AT BACK OF SIDEWALK GRADE, UNLESS OTHERWISE NOTED ON PLANS.
2. WHEN TRAFFIC SIGNAL EQUIPMENT (POLES, PULL BOXES, AND CONTROLLER CABINETS) ARE INSTALLED IN AN UPWARD SLOPE SECTION, THE PROJECT ENGINEER SHALL DESIGN A RETAINING WALL OR CUT BACK EXISTING GRADE TO OBTAIN A LEVEL AREA FOR AT LEAST 24 INCHES FROM THE TRAFFIC SIGNAL EQUIPMENT. THE SLOPE OF THE FINISHED GRADE SHALL NOT EXCEED A 1:6 SLOPE AND SHALL MATCH AND CONFORM TO THE EXISTING TERRAIN.
3. WHEN TRAFFIC SIGNAL EQUIPMENT (POLES, PULL BOXES, AND CABINETS) ARE INSTALLED IN A DOWNWARD SLOPE SECTION, NEEDED DIRT SHALL BE HAULED IN TO OBTAIN A LEVEL AREA FOR AT LEAST 24 INCHES FROM THE TRAFFIC SIGNAL EQUIPMENT. THE SLOPE OF THE FINISHED GRADE SHALL NOT EXCEED A 1:6 SLOPE AND SHALL MATCH AND CONFORM TO THE EXISTING TERRAIN.
4. CONDUIT END BELLS SHALL BE INSTALLED BEFORE PULLING WIRE.
5. BACKFILL WITH EXCAVATED MATERIALS AND THOROUGHLY TAMP PER M.A.G. STANDARD 601.
6. FINISH GRADE SHALL BE 2" DOWN FROM TOP OF BOX. ANY PAVEMENT OR SIDEWALK SHALL BE FLUSH WITH TOP OF BOX.
7. INSTALL 2500 LB PULL TAPE AND 1—#12 GREEN TRACER WIRE IN ALL EMPTY CONDUITS.

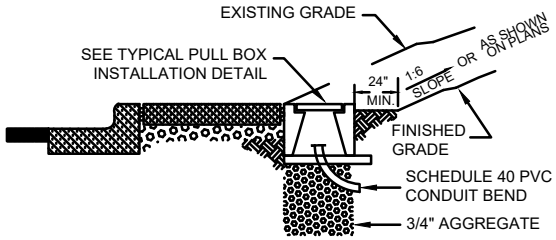

UPWARD SLOPE DETAIL

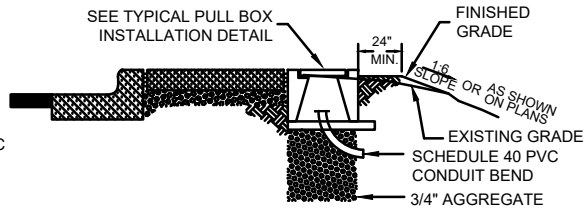

DOWNWARD SLOPE DETAIL

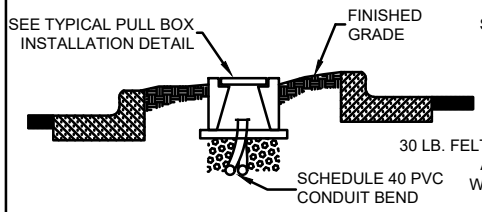

MEDIAN DETAIL

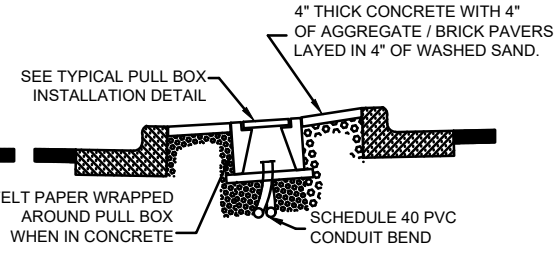

CONCRETE MEDIAN DETAIL

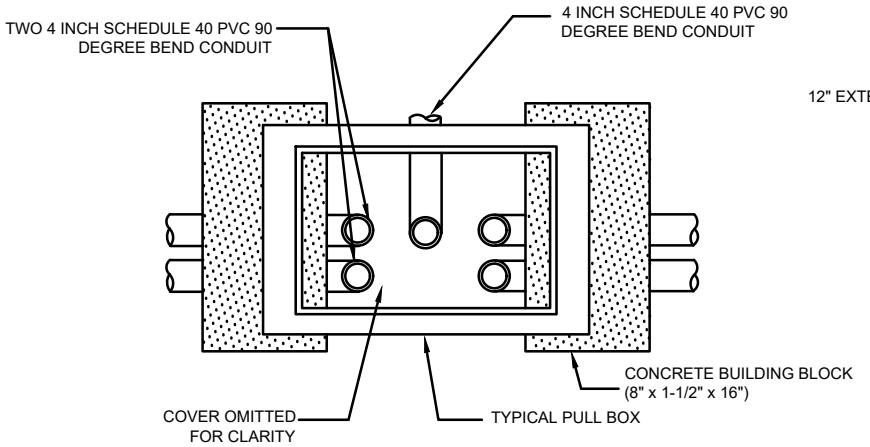

TOP VIEW

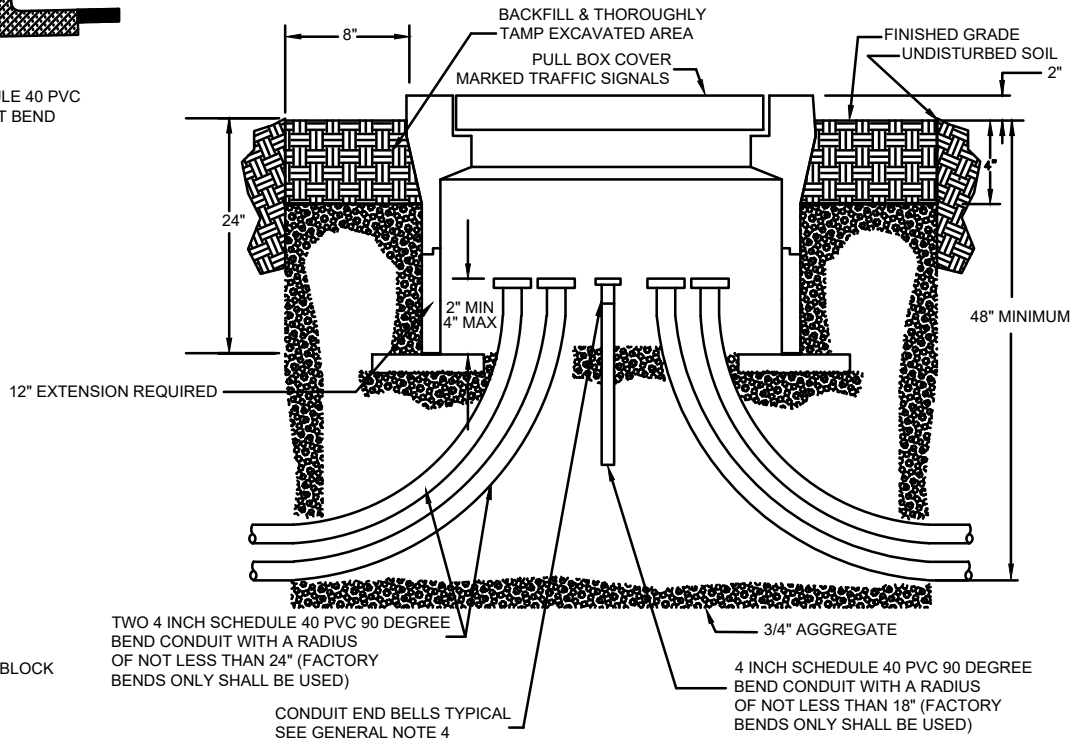

TYPICAL PULL BOX INSTALLATION DETAIL

GILBERT ARIZONA	STANDARD DETAIL	NO. 7 PULL BOX TYPICAL INSTALLATION FOR TRAFFIC SIGNALS	APPROVED TOWN ENGINEER — DATE	DETAIL NO. GIL-842

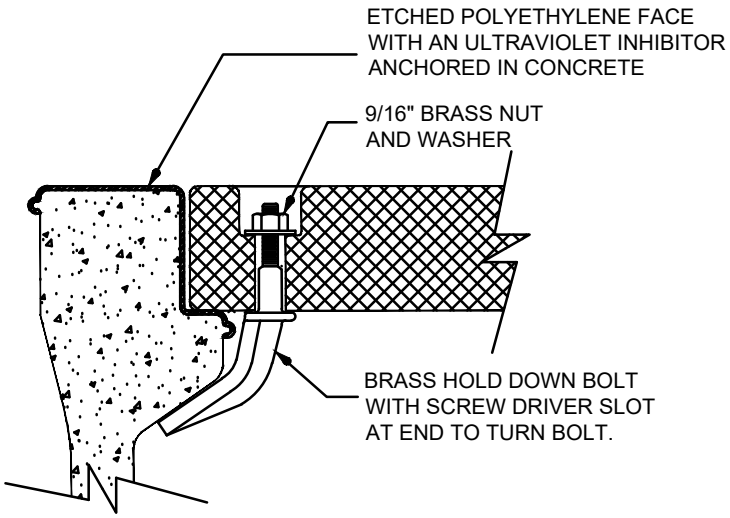

HOLD DOWN BOLT DETAIL

GENERAL NOTES:

1. ALL DIMENSIONS ARE IN INCHES.
2. ALL BOXES SHALL BE MADE OF A HIGH DENSITY REINFORCED CONCRETE MATERIAL WITH END AND SIDE KNOCKOUTS, AND NON-SETTLING SHOULDERS TO MAINTAIN GRADE. ALL BOXES SHALL BE MANUFACTURED WITH APPROXIMATE DIMENSIONS AS SHOWN.
3. ALL BOXES SHALL HAVE AN ETCHED POLYETHYLENE FACE WITH AN ULTRAVIOLET INHIBITOR ANCHORED IN CONCRETE.
4. ALL BOXES SHALL BE CHRISTY OR APPROVED EQUAL.
5. COVER LETTERING SHALL BE 1" LETTERS CAST IN STANDARD MARKINGS "TRAFFIC SIGNALS".
6. REFER TO GIL-842 FOR PROPER INSTALLATION.
7. ALL PULL BOX LIDS SHALL BE CHRISTY "FIBRELYTE" OR APPROVED EQUAL. CONCRETE LIDS SHALL NOT BE USED.

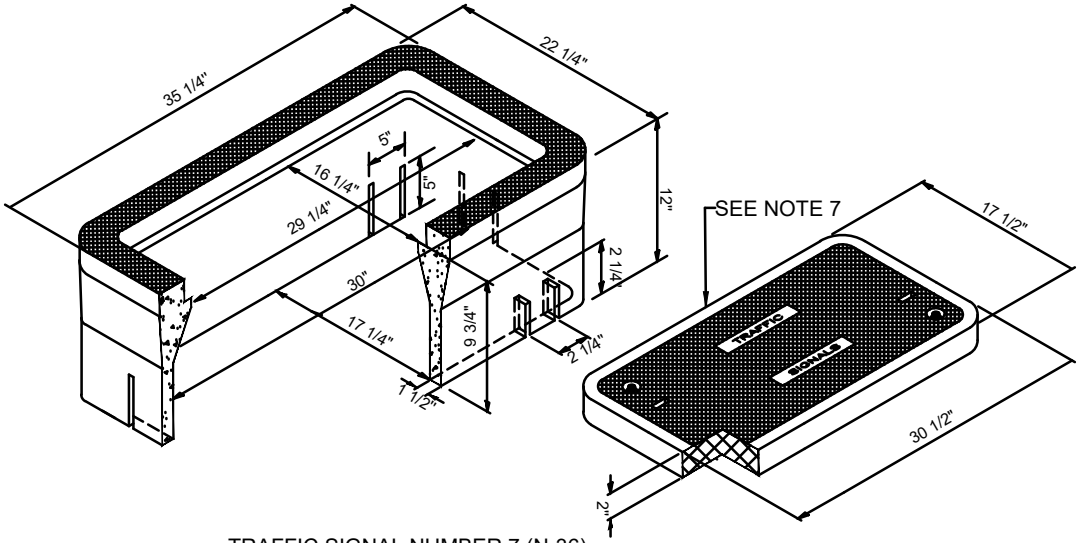

TRAFFIC SIGNAL NUMBER 7 (N-36)
(PULL BOX PART NUMBER N-36, LID PART NUMBER FL36T)

GILBERT ARIZONA	STANDARD DETAIL	TRAFFIC SIGNAL PULLBOX	APPROVED TOWN ENGINEER — DATE	DETAIL NO. GIL-843

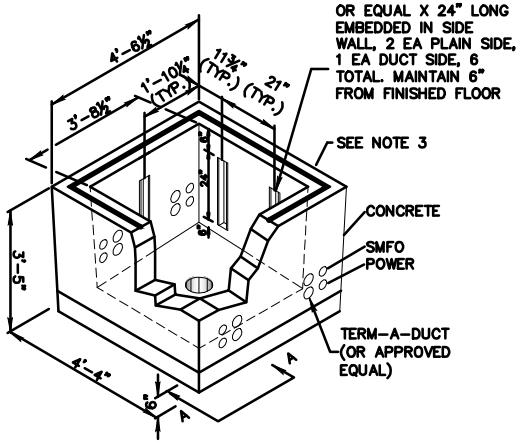

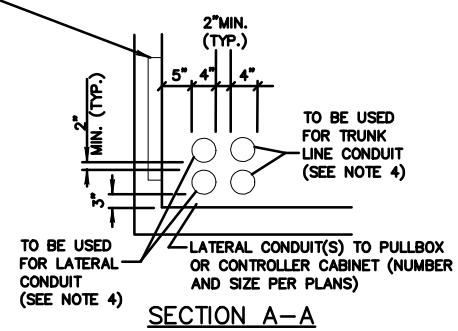

SECTION A–A

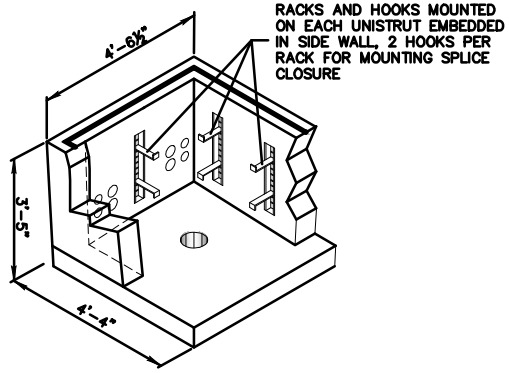

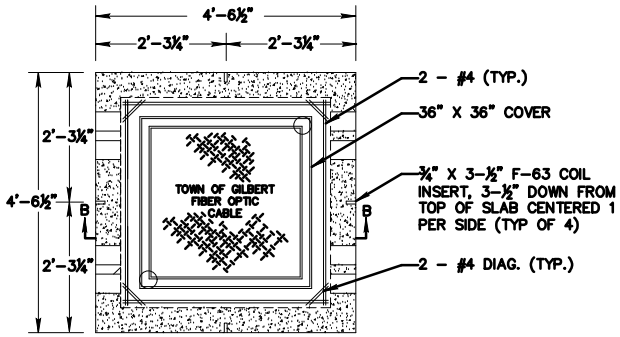

PLAN VIEW

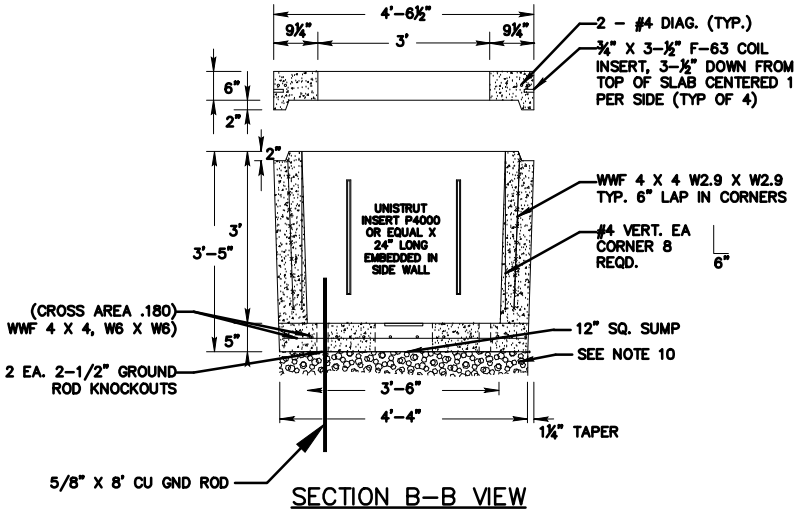

SECTION B–B VIEW

NOTES:

1. PULLING IRONS SHALL BE CAST INTO EACH CORNER OF THE BOTTOM OF VAULT.
2. ALL NEW VAULTS SHALL BE FURNISHED WITH RACKS AND HOOKS INSTALLED.
3. VAULT SHALL BE INSTALLED WITH A LOCKING LID WITH SEAL BETWEEN WALL & COVER ASSEMBLY.
4. TERM-A-DUCT (OR APPROVED EQUAL) SHALL ACCEPT A 4" DIA. PVC CONDUIT, UNLESS OTHERWISE SPECIFIED.
5. VAULT AND LID SHALL BE RATED FOR HS20-44 LIVE LOADING.
6. ALL POWER AND COMMUNICATION CABLES SHALL BE TAGGED WITH CABLE IDENTIFICATION.
7. *TOWN OF GILBERT FIBER OPTIC* SHALL BE THE TITLE EMBOSSED ON THE LID.
8. LOCKING LID W/SEAL BETWEEN WALL AND COVER ASSEMBLY.
9. SQUARE LID SHALL BE H20 GALVANIZED HINGED 36" X 36" CLEAR 180 DEGREE OPENING. DOOR SHALL BE TORSION SPRING ASSISTED WITH RECESSED LIFTING HANDLE WITH STAINLESS STEEL PENTA BOLT AND CAM LOCK.
10. VAULT SHALL BE PLACED ON A MINIMUM DEPTH OF 24" WASH AGGREGATE.

DESIGN CRITERIA:

LIVE LOAD	HS 20-44 TRUCK LOADING
EQUIVALENT LATERAL EARTH PRESSURE	30 P.S.F. (DRY) 36 P.S.F. (SATURATED)
DEPTH: (GROUND SURFACE TO TOP OF MANHOLE)	AT GRADE
MINIMUM SOIL BEARING CAPACITY	2,000 P.S.F.

DESIGN SPECS:

CONCRETE COMPRESSIVE STRENGTH SHALL BE BASED ON 28 DAY TEST AGE AND SHALL REACH F'c OF 6,000 P.S.I. (DRY CAST).

REINFORCING STEEL GRADE 60	60,000 P.S.I.
WELDED WIRE FABRIC ASTM A185	60,000 P.S.I.

DESIGN CODES:

AMERICAN CONCRETE INSTITUTE (ACI) 318-39.

ASTM C857-82 MINIMUM STRUCTURAL DESIGN LOADING FOR UNDERGROUND – PRECAST CONCRETE UTILITY STRUCTURES.

AMERICAN ASSOCIATION OF STATE HIGHWAY AND TRANSPORTATION OFFICIALS (AASHTO) HB-15TH EDITION.

GENERAL NOTES:

1. ALL JOINTS BETWEEN CONCRETE UNITS SHALL BE SEALED WITH A HIGH QUALITY SEALANT TO ASSURE WATERTIGHT INTEGRITY.
2. ALL REINFORCEMENT STEEL TO HAVE EQUAL COVER UNLESS OTHERWISE NOTED.
3. WITH PRIOR APPROVAL FROM THE TOWN OF GILBERT, THE CONTRACTOR MAY INSTALL 3'-6" X 3'-6" HANDHOLE-NO FLOOR W/36" SQ. HINGED COVER VAULT OR APPROVED EQUAL.

GILBERT ARIZONA	STANDARD DETAIL	NO. 9 VAULT AND COVER DETAIL	APPROVED TOWN ENGINEER — DATE	DETAIL NO. GIL-844

CONDUCTOR COLOR CODING CRITERIA

IMSA CABLE 19-1, #14 AWG SOLID, 4 CONDUCTOR & 7 CONDUCTOR

SIGNAL HEADS OUTBOARD & FAR LEFT	
7 - CONDUCTOR CABLE	
BASIC COLOR	SIGNAL INTERVAL
RED	RED
BLACK	YELLOW
GREEN	GREEN
ORANGE	YELLOW ARROW
BLUE	GREEN ARROW
WHITE	VEH. COM
WHT/BLK TR	VEH. COM

4 SECTION SIGNAL HEADS OUTBOARD & FAR LEFT (FYA)	
7 - CONDUCTOR CABLE	
BASIC COLOR	SIGNAL INTERVAL
RED	RED ARROW
BLACK	YELLOW ARROW
GREEN	GREEN ARROW
ORANGE	SPARE
BLUE	SPARE
WHITE	VEH. COM
WHT/BLK TR	FY ARROW

PEDESTRIAN HEADS	
4 - CONDUCTOR CABLE	
BASIC COLOR	SIGNAL INTERVAL
RED	DON'T WALK
GREEN	WALK
WHITE	PED. COM.
BLACK	SPARE

SIGNAL HEADS INBOARD & SIDEMOUNT	
4 - CONDUCTOR CABLE	
BASIC COLOR	SIGNAL INTERVAL
RED	RED
BLACK	YELLOW
GREEN	GREEN
WHITE	VEH. COM

PEDESTRIAN HEADS	
4 - CONDUCTOR CABLE	
COLOR	CALL OUT
RED	PUSH BUTTON
WHITE	P.B. COM
GREEN	SPARE
BLACK	SPARE

THE CABLE SHALL BE TAGGED TO INDICATE PHASE.

NOTE:
GEL FILLED WIRE NUTS SHALL BE USED FOR SPLICING CONDUCTORS.

ALL NEUTRALS SHALL BE SPLICED TOGETHER WITH A SPLIT BOLT WIRE CONNECTOR AND ELECTRICAL TAPED WHITE COVERING SPLIT BOLT.

IMSA CABLE 19-1, #14 AWG, 25 CONDUCTOR

CABLE #1	CABLE #2	CONDUCTOR COLOR		SIGNAL INTERVAL
		BASIC COLOR	TRACER STRIPE	
Ø1 OR OVERLAP C FY ARROW	Ø5 OR OVERLAP D FY ARROW	RED	WHITE	RED ARROW
		BLACK	WHITE	YELLOW ARROW
		GREEN	WHITE	GREEN ARROW
		BLACK	WHITE/RED	FLASHING YELLOW ARROW
Ø2	Ø6	RED	- - -	RED
		ORANGE	- - -	YELLOW
		GREEN	- - -	GREEN
Ø3 OR OVERLAP B FY ARROW	Ø7 OR OVERLAP A FY ARROW	BLACK	RED	RED ARROW
		ORANGE	RED	YELLOW ARROW
		BLUE	RED	GREEN ARROW
		WHITE	BLACK/RED	FLASHING YELLOW ARROW
Ø4	Ø8	RED	BLACK	RED
		ORANGE	BLACK	YELLOW
		GREEN	BLACK	GREEN
Ø2 PED.	Ø6 PED.	BLUE	- - -	WALK
		BLACK	- - -	DON'T WALK
		WHITE	BLACK	PUSH BUTTON
Ø4 PED.	Ø8 PED.	BLUE	WHITE	WALK
		RED	GREEN	DON'T WALK
		WHITE	RED	PUSH BUTTON
ALL PHASES	ALL PHASES	WHITE	- - -	P.B. COMMON
		BLUE	BLACK	SPARE
		ORANGE	GREEN	SPARE
		RED	BLACK/WHITE	SPARE
		GREEN	BLACK/WHITE	SPARE

THE 25 CONDUCTOR CABLES SHALL BE TAGGED ON BOTH ENDS AS FOLLOWS:
RED TAPE FOR SE TO NE RUN
YELLOW TAPE FOR SE TO SW RUN
GREEN FOR SW TO NW RUN
BLUE FOR NW TO NE RUN

GILBERT ARIZONA

STANDARD DETAIL

IMSA WIRE PHASE IDENTIFICATION

APPROVED

TOWN ENGINEER

DATE

DETAIL NO.
GIL-850

NOTE:
PHASE 2 IS ALWAYS NORTHBOUND
REGARDLESS OF STREET CLASSIFICATION.

PREEMPTION (PE) CHANNELS

PE Channel A = SB	Preemptor 3 (Ø6) GREEN TAPE
PE Channel B = WB	Preemptor 4 (Ø8) BLUE TAPE
PE Channel C = NB	Preemptor 5 (Ø2) RED TAPE
PE Channel D = EB	Preemptor 6 (Ø4) YELLOW TAPE

PREEMPTION	
4 CONDUCTOR CABLE	
BASIC COLOR	SIGNAL INTERVAL
YELLOW	A,B,C,D
ORANGE	26V
BLUE	GROUND
BARE	EARTH GROUND

NOTE:
PREEMPTION CABLE SHALL BE
M913 STROBECOM DETECTOR
CABLE OR APPROVED EQUAL.

25 CONDUCTOR CABLE COLOR CODE MULTI-PHASE

25 Cond Tape Color	WIRE COLOR	PHASE	INDICATION	PHASE CHART COLOR
	25 Conductor Ring 1 will have 1 white tape on outer sheathing to identify			
Ø1	RED/WHITE	Ø1	S/B LT - RED	GREEN/WHITE
	BLACK/WHITE	Ø1	S/B LT - YELLOW	GREEN/WHITE
	GREEN/WHITE	Ø1	S/B LT - GREEN	GREEN/WHITE
	BLACK/WHITE-RED	Ø1	S/B LT - FY ARROW	GREEN/WHITE
Ø2	RED	Ø2	N/B THRU - RED	RED
	ORANGE	Ø2	N/B THRU - YELLOW	RED
	GREEN	Ø2	N/B THRU - RED	RED
	BLUE	Ø2	N/B PED - WALK	RED/ORANGE
	BLACK	Ø2	N/B PED - DON'T WALK	RED/ORANGE
	WHITE/BLACK	Ø2	N/B PED PUSHBUTTON	RED/ORANGE/ORANGE
Ø3	BLACK/RED	Ø3	N/B THRU - RED	BLUE/WHITE
	ORANGE/RED	Ø3	N/B THRU - RED	BLUE/WHITE
	BLUE/RED	Ø3	N/B THRU - RED	BLUE/WHITE
	WHITE/BLACK-RED	Ø3	N/B THRU - RED	BLUE/WHITE
Ø4	RED/BLACK	Ø4	E/B THRU - RED	YELLOW
	ORANGE/BLACK	Ø4	E/B THRU - YELLOW	YELLOW
	GREEN/BLACK	Ø4	E/B THRU - GREEN	YELLOW
	BLUE/WHITE	Ø4	E/B PED - WALK	YELLOW/ORANGE
	RED/GREEN	Ø4	E/B PED - DON'T WALK	YELLOW/ORANGE
	WHITE/RED	Ø4	E/B PED PUSHBUTTON	YELLOW/ORANGE/ORANGE
	WHITE	Ø2, Ø4	COMMON PB	
	BLUE/BLACK		SPARE	
	ORANGE/GREEN		SPARE	
	RED/BLACK-WHITE		SPARE	
	GREEN/BLACK-WHITE		SPARE	
	25 Conductor Ring 2 will have 2 white tape on outer sheathing to identify			
Ø5	RED/WHITE	Ø5	N/B LT - RED	RED/WHITE
	BLACK/WHITE	Ø5	N/B LT - YELLOW	RED/WHITE
	GREEN/WHITE	Ø5	N/B LT - GREEN	RED/WHITE
	BLACK/WHITE-RED	Ø5	N/B LT - FY YELLOW	RED/WHITE
Ø6	RED	Ø6	S/B THRU - RED	GREEN
	ORANGE	Ø6	S/B THRU - YELLOW	GREEN
	GREEN	Ø6	S/B THRU - RED	GREEN
	BLUE	Ø6	S/B PED - WALK	GREEN/ORANGE
	BLACK	Ø6	S/B PED - DON'T WALK	GREEN/ORANGE
	WHITE/BLACK	Ø6	S/B PED PUSHBUTTON	GREEN/ORANGE/ORANGE
Ø7	BLACK/RED	Ø3	N/B THRU - RED	BLUE/WHITE
	ORANGE/RED	Ø3	N/B THRU - RED	BLUE/WHITE
	BLUE/RED	Ø3	N/B THRU - RED	BLUE/WHITE
	WHITE/BLACK-RED	Ø3	N/B THRU - RED	BLUE/WHITE
Ø8	RED/BLACK	Ø8	W/B THRU - RED	BLUE
	ORANGE/BLACK	Ø8	W/B THRU - YELLOW	BLUE
	GREEN/BLACK	Ø8	W/B THRU - GREEN	BLUE
	BLUE/WHITE	Ø8	W/B PED - WALK	BLUE/ORANGE
	RED/GREEN	Ø8	W/B PED - DON'T WALK	BLUE/ORANGE
	WHITE/RED	Ø8	W/B PED PUSHBUTTON	BLUEORANGE/ORANGE
	WHITE	Ø6, Ø8	COMMON PB	
	BLUE/BLACK		SPARE	
	ORANGE/GREEN		SPARE	
	RED/BLACK-WHITE		SPARE	
	GREEN/BLACK-WHITE		SPARE	

Starting with Outboard (For R) Head 1 Color Tape = Head 1, 2 Color Tape = Head 2, 3 will be side mount etc.
Q-Head or G-Head will be respective color tape plus white tape
25 Cond. will have Red tape on S/E to N/E corner, Yellow tape on S/E to S/W corner. Green tape S/W to N/W corner, Blue tape N/W to N/E corner

GILBERT ARIZONA

STANDARD DETAIL

WIRE COLOR CODE AND IDENTIFICATION

APPROVED

TOWN ENGINEER

DATE

DETAIL NO.
GIL-851

WIRING TYPICAL

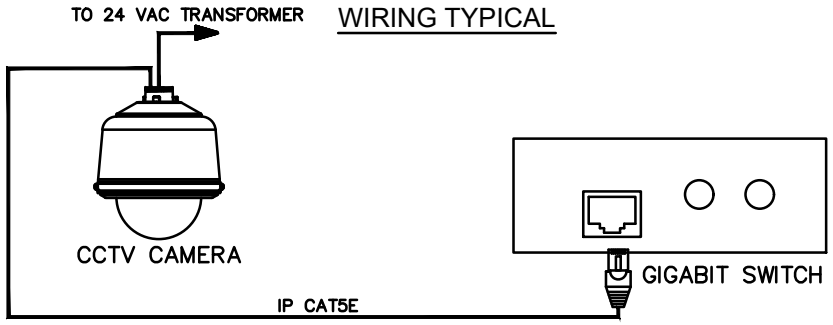

NOTES:

1. THE CCTV CAT5E CABLE SHALL BE RUN UNSPLICED FROM THE CCTV TO THE GIGABIT SWITCH INSTALLED IN THE CABINET
2. INSTALLATION SHALL BE ACCORDING TO MANUFACTURER SPECIFICATIONS
3. CAMERA SHOULD BE MOUNTED ON THE SOUTHEAST CORNER OF THE INTERSECTION. CONTACT THE TOWN OF GILBERT AT (480) 503-6926 FOR SPECIFIC LOCATION.
4. CONTACT THE TOWN OF GILBERT AT (480) 503-6926 FOR APPROVED CCTV CAMERA AND VIDEO ENCODER MODELS AND EQUIPMENT.

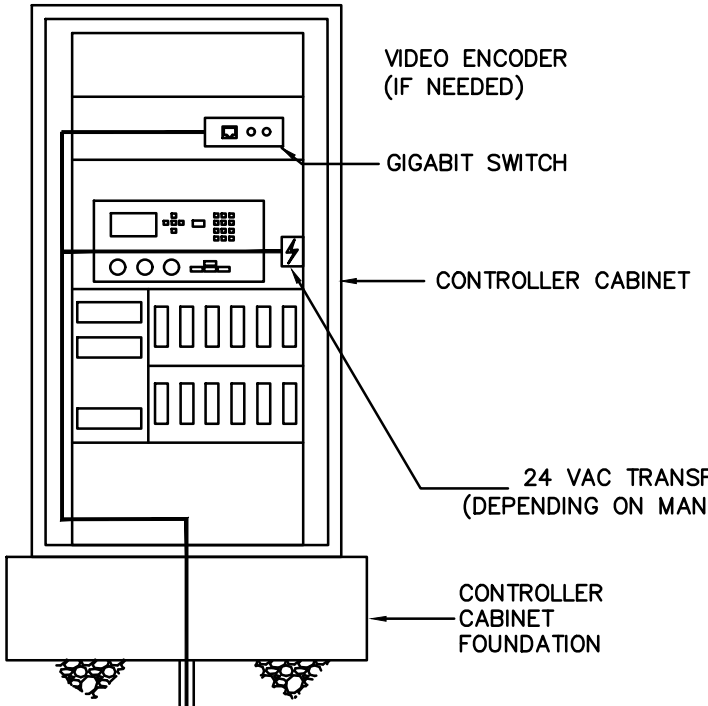

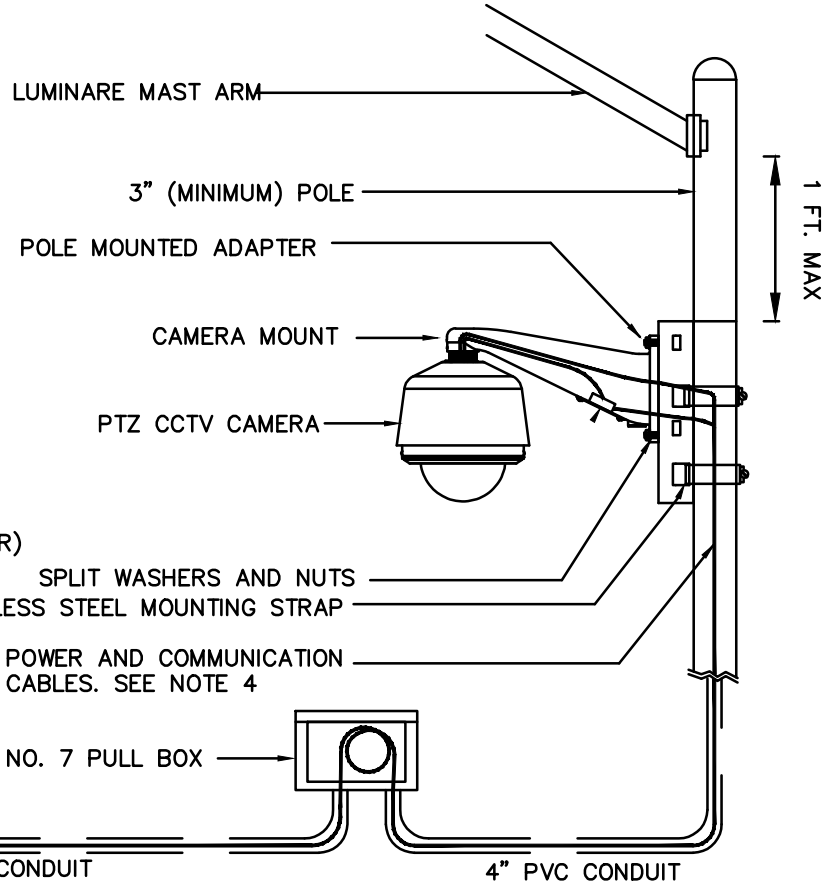

PLAN

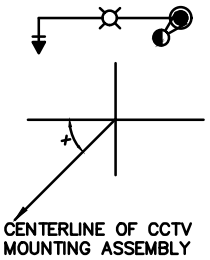

X = THE ROTATION OF THE CCTV CAMERA SHALL BE ALIGNED TO THE POINT AT THE TRAFFIC SIGNAL POLE ON THE DIAGONALLY OPPOSITE CORNER. ALSO SEE NOTE 3.

CCTV SCHEMATIC

GILBERT ARIZONA	STANDARD DETAIL	CCTV CAMERA DETAIL	APPROVED TOWN ENGINEER / DATE	DETAIL NO. GIL-861

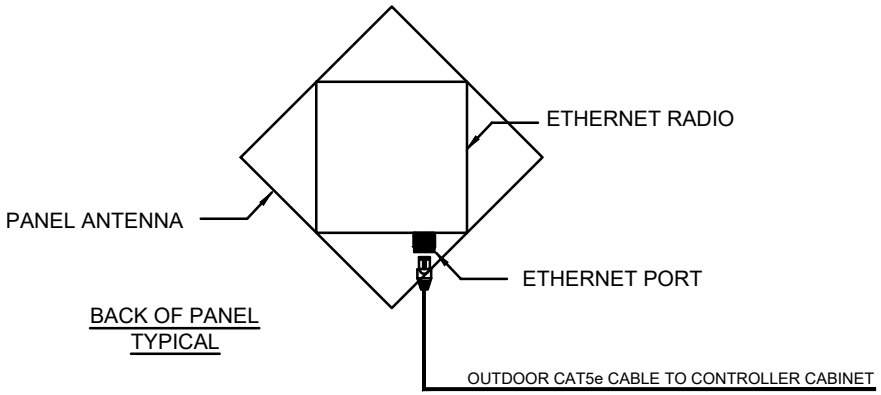

NOTES:

1. PANEL ANTENNA SHALL BE MOUNTED AT LOCATION WITH BEST LINE-OF-SIGHT. CONTACT THE TOWN OF GILBERT AT (480) 503-6926 FOR MOUNTING LOCATION.
2. CONTACT THE TOWN OF GILBERT AT (480) 503-6926 FOR MOUNTING BRACKET INFORMATION.
3. ORIENTATION OF THE PANEL ANTENNA IS SITE SPECIFIC. CONTACT THE TOWN OF GILBERT AT (480) 503-6926 FOR DETAILS BEFORE INSTALLATION.
4. INSTALLATION SHALL BE ACCORDING TO MANUFACTURER SPECIFICATIONS.

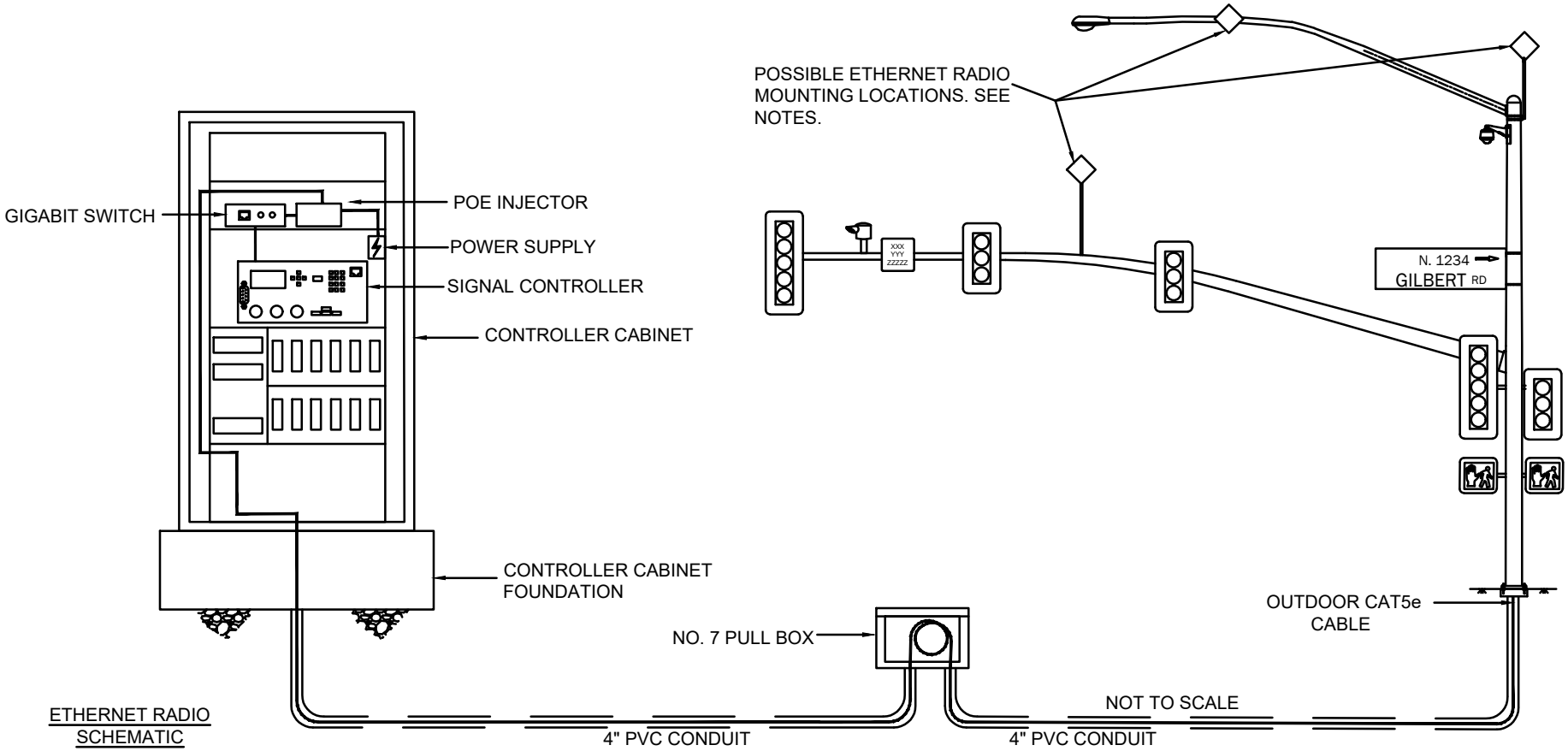

ETHERNET RADIO SCHEMATIC

GILBERT ARIZONA	STANDARD DETAIL	ETHERNET RADIO DETAIL	APPROVED TOWN ENGINEER DATE	DETAIL NO. GIL-862

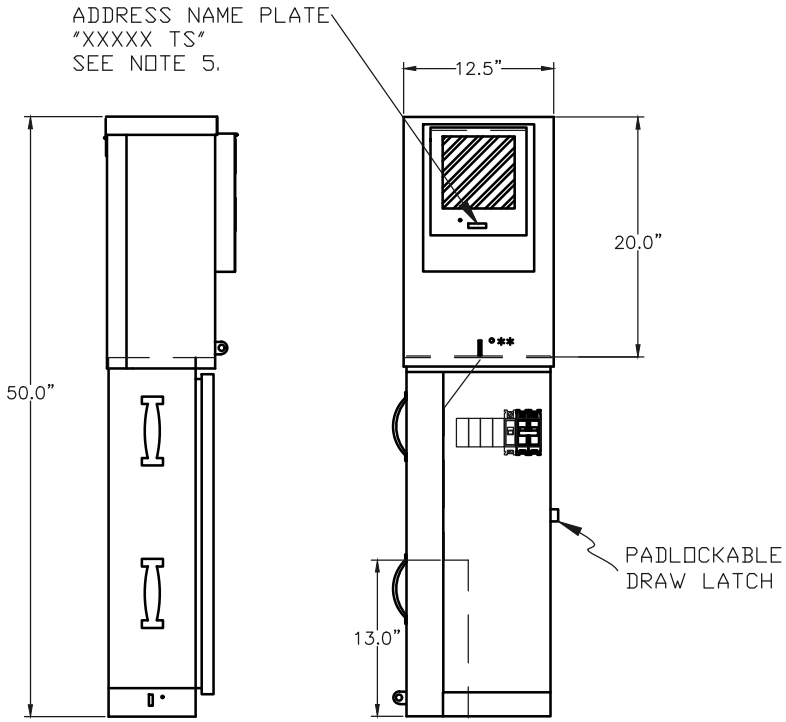

LEFT SIDE FRONT VIEW

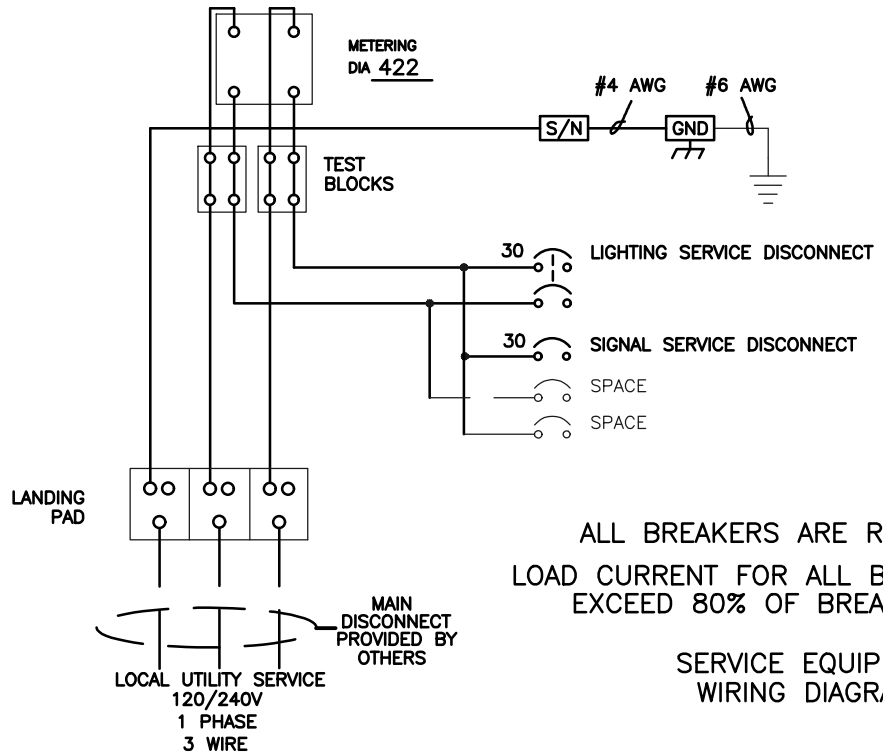

ALL BREAKERS ARE RATED @22KAIC

LOAD CURRENT FOR ALL BREAKERS NOT TO EXCEED 80% OF BREAKER AMPERAGE

SERVICE EQUIPMENT
WIRING DIAGRAM

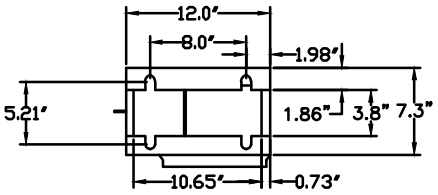

BASE PLAN

ENCLOSURE CONSTRUCTION NOTES

1. EXTERIOR, 1/8" ALUMINUM, AND INTERIOR 14 GA COLD ROLLED STEEL ELECTRICALLY WELDED AND REINFORCED WHERE REQUIRED.
2. CONSTRUCTION WILL BE NEMA 3R, RAINTIGHT.
3. ALL NUTS, BOLTS AND SCREWS WILL BE STAINLESS STEEL.
4. NUTS, BOLTS & SCREWS WILL NOT BE VISIBLE FROM OUTSIDE OF ENCLOSURE.
5. NAMEPLATES WILL BE PROVIDED AS REQUIRED.
6. CONTROL WIRING WILL BE MARKED AT BOTH ENDS BY PERMANENT WIRE MARKERS.
7. A PLASTIC COVERED WIRING DIAGRAM WILL BE ATTACHED TO THE INSIDE OF THE FRONT DOOR.
8. ENCLOSURE WILL BE FACTORY WIRED AND CONFORM TO REQUIRED NEMA AND UL 508A STANDARDS.
9. COLOR TO BE: WHITE

MODEL
#26-000-GIL
APS & SRP
COMPLIANT

GILBERT ARIZONA	STANDARD DETAIL	TRAFFIC SIGNAL METER PEDESTAL	APPROVED TOWN ENGINEER DATE	DETAIL NO. GIL-871

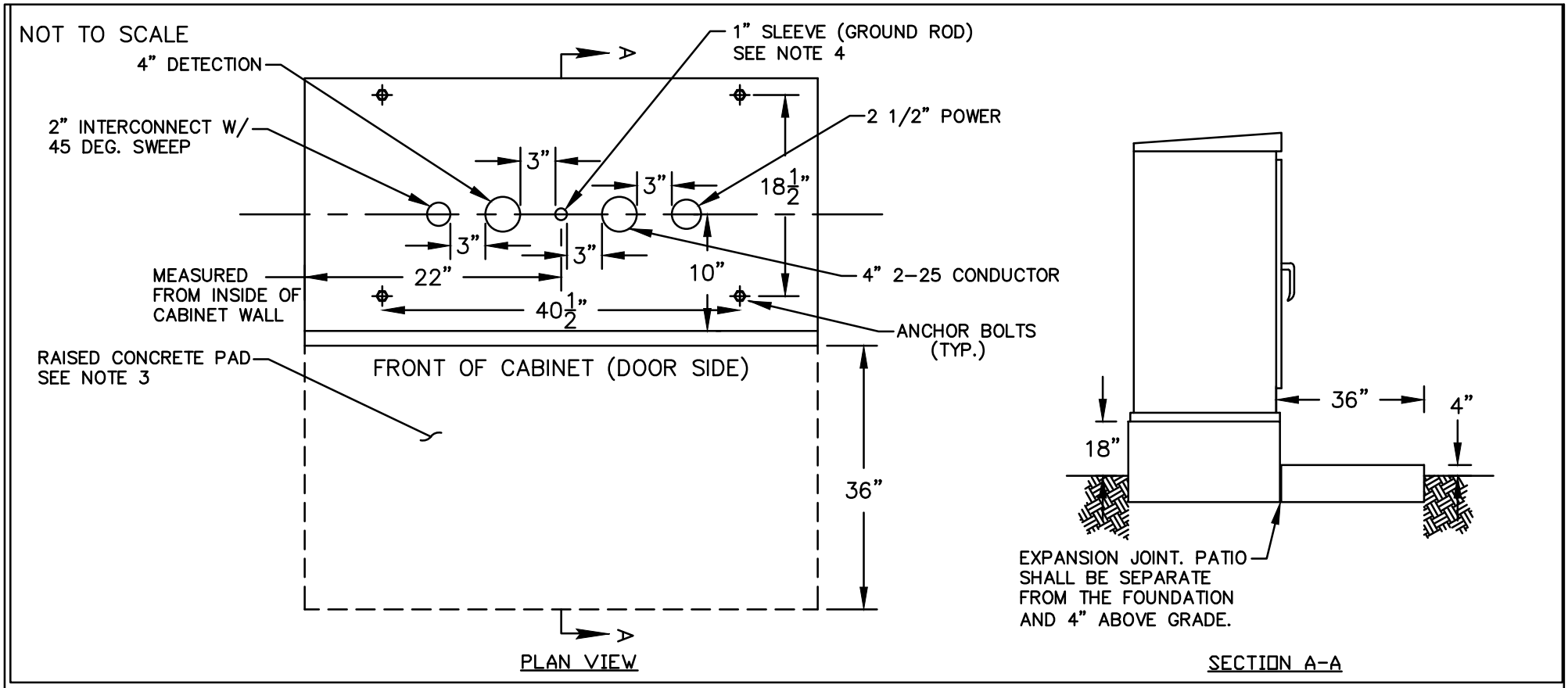

NOTES:

1. ALL MATERIALS AND INSTALLATION SHALL CONFORM TO THE TOWN OF GILBERT STANDARD DETAILS, LATEST EDITION; THE 2000 ARIZONA DEPARTMENT OF TRANSPORTATION (ADOT) "STANDARD SPECIFICATIONS FOR ROAD AND BRIDGE CONSTRUCTION"; THE 2004 ADOT "TRAFFIC SIGNALS AND LIGHTING STANDARD DRAWINGS"; AND THE MANUAL ON UNIFORM TRAFFIC CONTROL DEVICES (MUTCD).
2. CONDUIT PROJECTION ABOVE FOUNDATION SHALL BE 2½" MIN. AND 4" MAX AND SHALL HAVE SMOOTH BELL ENDS ATTACHED.
3. IN UNPAVED AREAS A RAISED CONCRETE PAD 36" X 18" X THE WIDTH OF FOUNDATION, SHALL BE PLACED IN FRONT OF THE CABINET. PAD SHALL BE SET 12" BELOW THE FOUNDATION ELEVATION. SLOPE PAD AWAY FROM CABINET. SEE ADOT STD. DWG. T.S. 2-1.
4. 1" SLEEVE (FOR GROUND ROD) SHALL BE INSERTED WHEN FOUNDATION IS POURED. INSTALL A ⅝" DIAMETER X 8' LONG BONDED COPPER GROUND ROD IN 1" SLEEVE CENTERED IN THE CABINET (APPROX. 22" FROM EDGE) AND PLACED 10" BACK FROM CABINET DOOR.
5. PRIOR TO POURING CONCRETE FOUNDATION, FINAL APPROVAL OF CONDUIT PLACEMENT FROM TRAFFIC OPERATIONS OR DESIGNEE SHALL BE OBTAINED.

GILBERT ARIZONA	STANDARD DETAIL	CONTROL CABINET FOUNDATION	APPROVED _____ TOWN ENGINEER _____ DATE	DETAIL NO. GIL-872

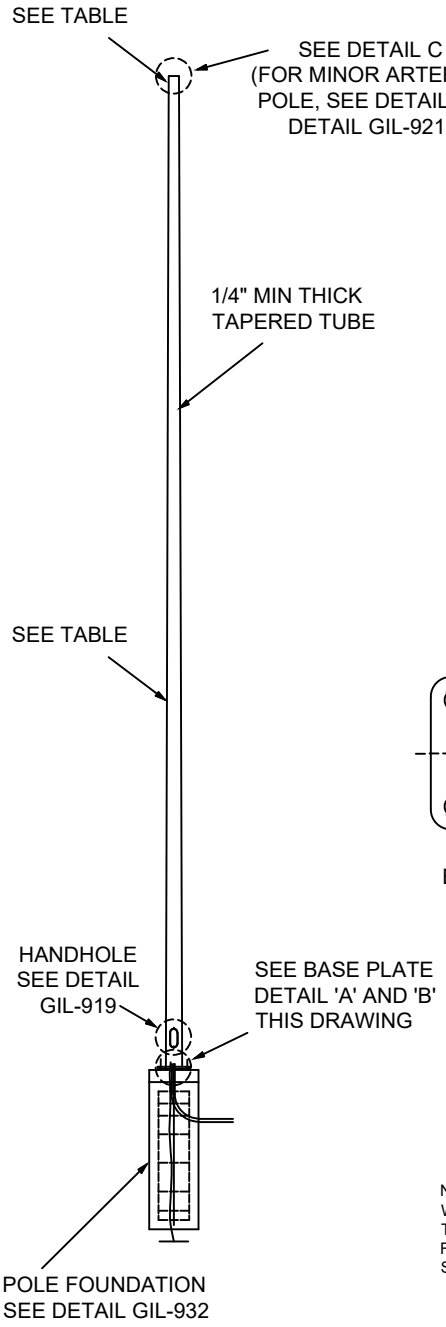

DATA TABLE

LOCATION	LUMINAIRE MTG. HGT.	POLE HGT.	HANDHOLE HGT.	BASE O.D. PIPE	TOP O.D. PIPE	MAST ARM LENGTH	ARM RISE	GROUNDING DETAIL	FOUNDATION TYPE
LOCAL & COLLECTOR	32'-0"	32'-0"	1'-0"	0'-8 1/2"	0'-4"	SINGLE TENON & BOX		DETAIL GIL-941 DETAIL GIL-942	DETAIL GIL-932
MINOR ARTERIAL	40'-0"	32'-0"	1'-0"	0'-8 1/2"	0'-4"	SEE NOTE 8	8'-0"	DETAIL DETAIL	DETAIL GIL-932
MAJOR ARTERIAL	40'-0"	40'-0"	1'-6"	0'-9 5/8"	0'-4"	DOUBLE TENON & BOX		DETAIL DETAIL	DETAIL GIL-932

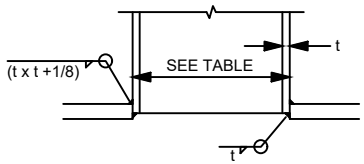

BASE PLATE
DETAIL 'A'

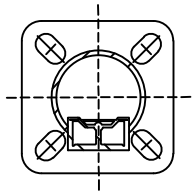

BASE PLATE
DETAIL 'B'

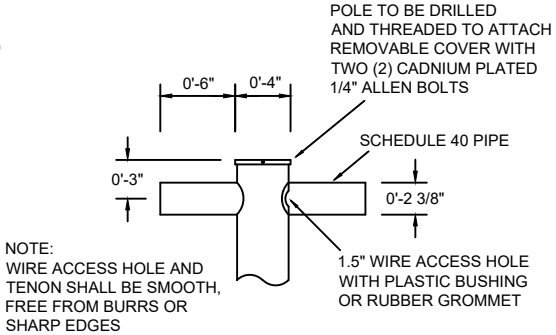

TENON
DETAIL 'C'

NOTES:

1. ALL WELDS SHALL BE GROUND SMOOTH, AND ALL BURRS AND SHARP EDGES SHALL BE REMOVED PRIOR TO POWDER COATING.
2. ALL HARDWARE IS TO BE FURNISHED WITH POLE. HARDWARE SHALL BE CORROSION RESISTANT.
3. AFTER FABRICATION, THE POLE SHALL BE SHOTBLASTED TO A NEAR WHITE FINISH PER SSPC SP-6 AND THEN TREATED WITH AN IRON PHOSPHATE SOLUTION.
4. A POLYESTER POWDER SHALL BE ELECTROSTATICALLY APPLIED AND CURED TO A MINIMUM 2.5 MIL THICKNESS PER MANUFACTURER'S RECOMMENDATIONS. COLOR TO MATCH TIGER DRYLAC RAIL BRONZE MATTE EXTERIOR 049/62070 OR APPROVED EQUIVALENT.
5. INSTALL GROUNDING CONNECTOR, ILSCO TA6-S OR EQUIVALENT WITH 1/4" ROUNDHEAD ALLEN DRIVE MACHINE SCREW AND NUT.
6. SEE DETAIL H2 FOR REINFORCED HAND HOLE DETAIL.
7. BASE PLATE SHALL BE 1" X 12" X 12" WITH 1-1/4" ELONGATED HOLES ON 12-1/2" B.C.
8. ALL SUBMITTALS SHALL BE SEALED BY A LICENSED PROFESSIONAL ENGINEER.
9. A STAINLESS STEEL TAG SHALL BE PERMANENTLY ATTACHED TO THE POLE ABOVE THE HAND HOLE STATING THE MANUFACTURER'S NAME AND DATE MANUFACTURED

GILBERT ARIZONA	STANDARD DETAIL	ROUND TAPERED POLE	APPROVED TOWN ENGINEER DATE	DETAIL NO. GIL-901

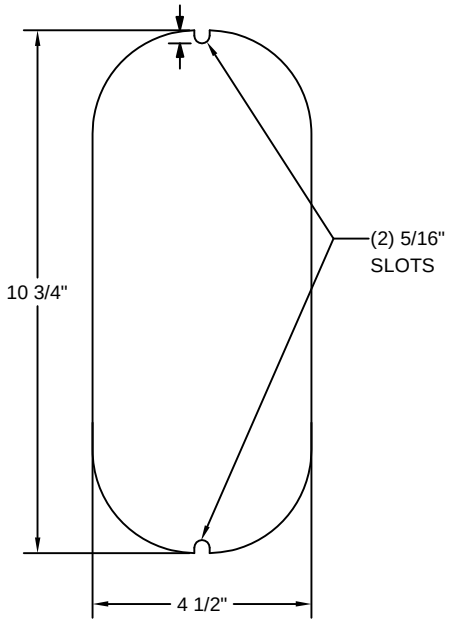

HANDHOLE COVER

(TUBE & FRAME NOT SHOWN)

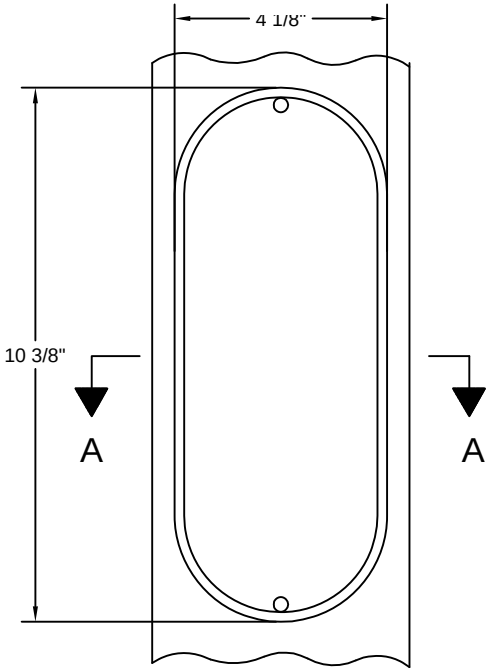

POLE ELEVATION

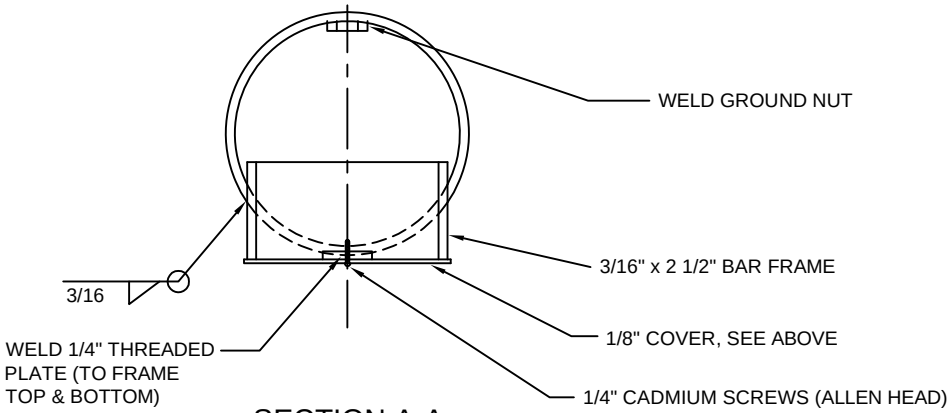

SECTION A-A

*CENTER OF HANDHOLE SHALL BE 1' 6" FROM BOTTOM OF POLE

GILBERT ARIZONA	STANDARD DETAIL	POLE HANDHOLE DETAIL $4\frac{1}{8}$" x $10\frac{3}{8}$" REINFORCED	APPROVED TOWN ENGINEER DATE	DETAIL NO. GIL-919

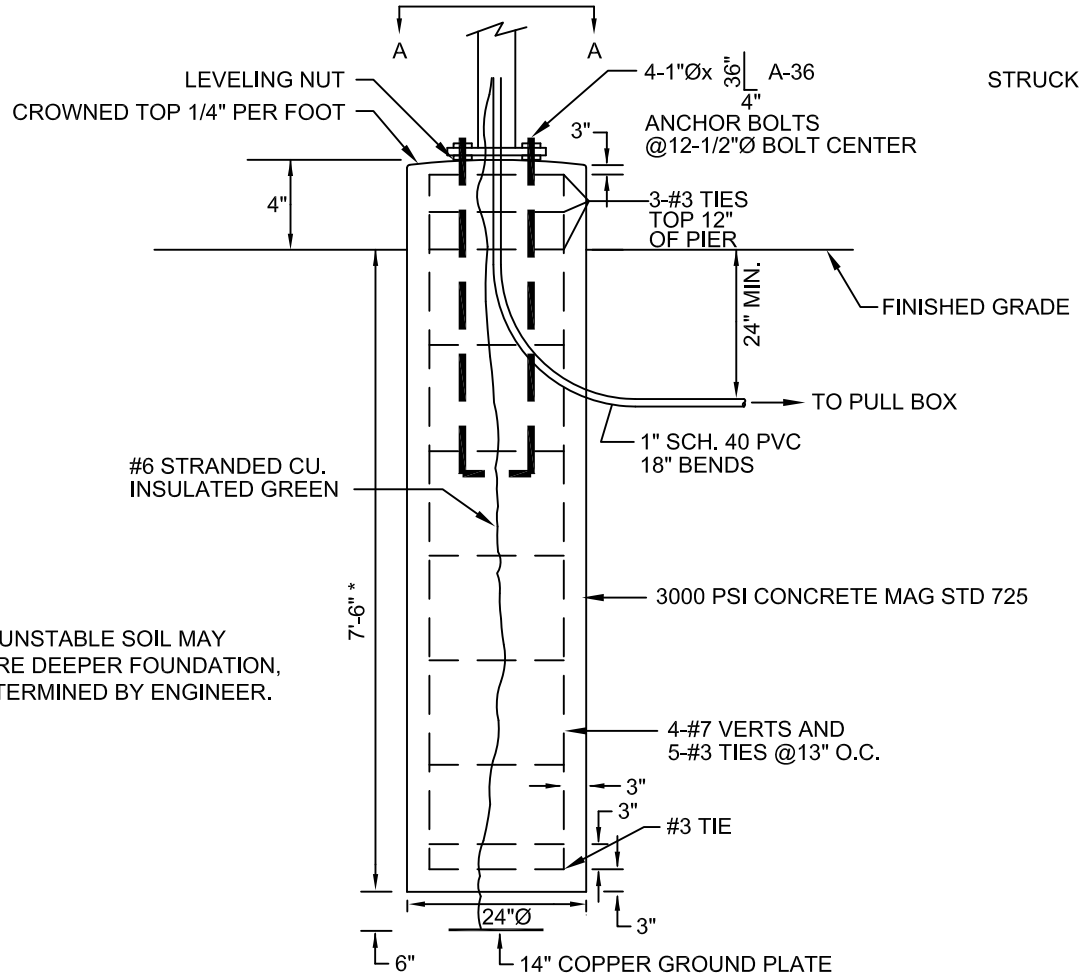

NOTE: UNSTABLE SOIL MAY REQUIRE DEEPER FOUNDATION, AS DETERMINED BY ENGINEER.

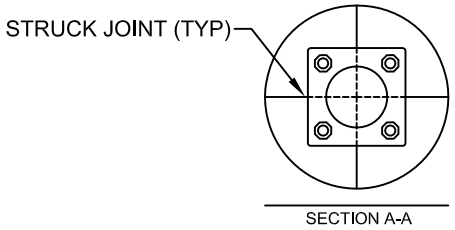

NOTES:

1. REINF A615 GRADE 60 EXCEPT #3 GRADE 40.
2. TOP OF FOUNDATION SHALL BE CROWNED $\frac{1}{4}$" PER FOOT AND FINISHED WITH A SMOOTH SURFACE WITH A 1/2" ROUND EDGE.
3. POLE FOUNDATION SHALL CURE FOR 72 HOURS BEFORE INSTALLING LIGHT POLES.
4. ALL FINISHED POLE FOUNDATIONS SHALL BE 4" ABOVE GRADE.
5. ANCHOR BOLTS SHALL BE FULLY GALVANIZED PER ASTM A-135.
6. CONCRETE PLACEMENT SHALL FOLLOW MAG SPECIFICATIONS.
7. DO NOT FREEFALL CONCRETE IN EXCESS OF 5'.
8. A VIBRATOR SHALL BE USED TO DISTRIBUTE CONCRETE & REDUCE AIR VOIDS.
9. MAXIMUM SLUMP SHALL NOT EXCEED 5".
10. FOR FUSING & GROUNDING SEE DETAILS GIL-941 AND GIL-942.
11. *DEPTH OF FOUNDATION SHALL BE VERIFIED BY INSPECTOR PRIOR TO POURING.
12. A LEVELING NUT SHALL BE PLACED BETWEEN TOP OF FOUNDATION AND BASE PLATE OF POLE.
13. TOP OF FOUNDATION SHALL HAVE 4 STRUCK JOINTS EVENLY SPACED.

GILBERT ARIZONA	STANDARD DETAIL	CONCRETE FOUNDATION DETAIL	APPROVED TOWN ENGINEER DATE	DETAIL NO. GIL-932

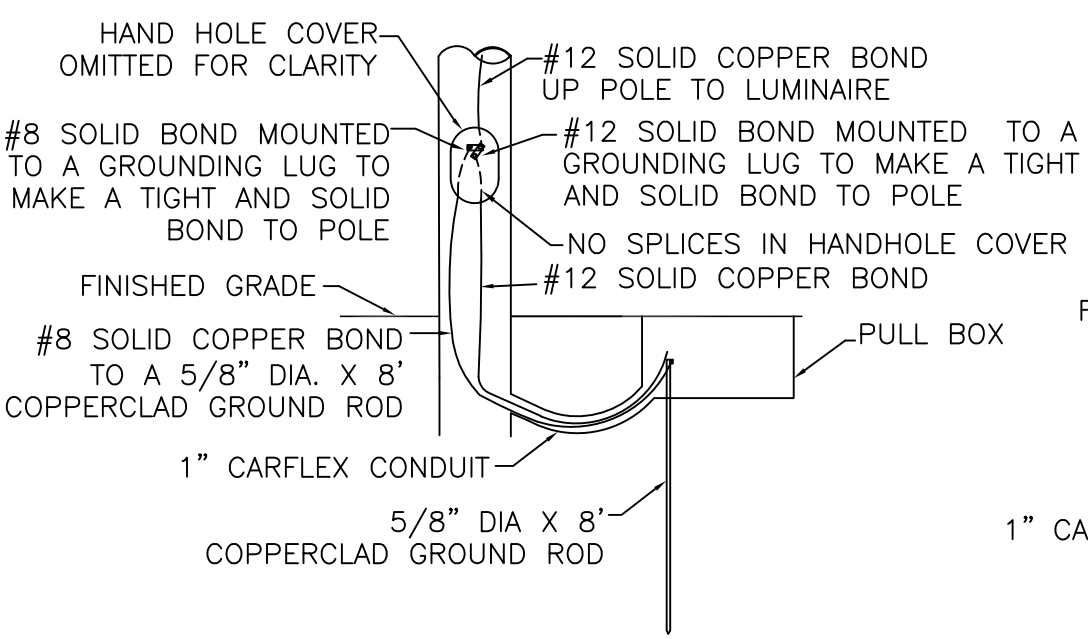

POLE GROUNDING DETAIL

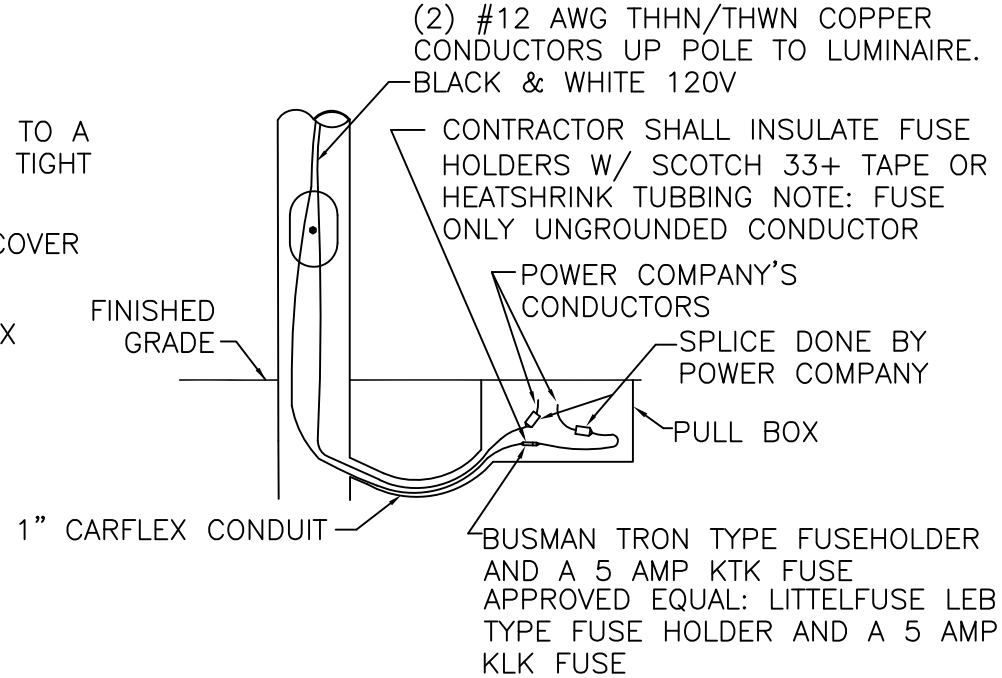

POLE FUSING DETAIL

GENERAL NOTES

1. ALL SPLICES SHALL SHALL BE DONE USING A BLACKBURN WR–7, WR–9, WR–189, OR WR–279 H TYPE CRIMP CONNECTOR. CRIMPING SHALL BE DONE USING A BURNDY TOOL NO. OS–50 WITH 5/8" DIE SHALL BE USED TO CRIMP THE WR–7 WR–9. A BURNDY TOOL NO. MD6–8 WITH O DIE SHALL BE USED TO CRIMP THE WR–189. A BURNDY TOOL NO. MD6–8 WITH D3 DIE SHALL BE USED TO CRIMP THE WR–279.
2. ALL POLES SHALL BE WIRED USING TWO (2) #12 AWG TYPE THHN/THWN STRANDED COPPER CONDUCTORS, 600 VOLT, NEC APPROVED AND ONE (1) #12 SOLID BARE OR GREEN COPPER BOND WIRE. BOND WIRE SHALL RUN FROM THE LUMINAIRE TO A MINIMUM OF TWELVE (12) INCHES BELOW POLE HAND HOLE, FOR TERMINATION. CONDUCTORS SHALL RUN FROM LUMINAIRE TO PULL BOX.
3. ALL STREETLIGHT CONDUCTORS AND BOND WIRES SHALL BE COPPER. CONDUCTORS FROM PULL BOX TO LUMINAIRE SHALL BE AWG TYPE THHN/THWN. ALL CONDUCTORS SHALL BE STRANDED AND ALL BOND WIRES SHALL BE SOLID.

GILBERT ARIZONA	STANDARD DETAIL	FUSING AND GROUNDING DETAIL SRP AREA	APPROVED TOWN ENGINEER DATE	DETAIL NO. GIL-941

APPROVED EQUAL:
LITTELFUSE LEB TYPE FUSE
HOLDER AND A 5 AMP KLK FUSE

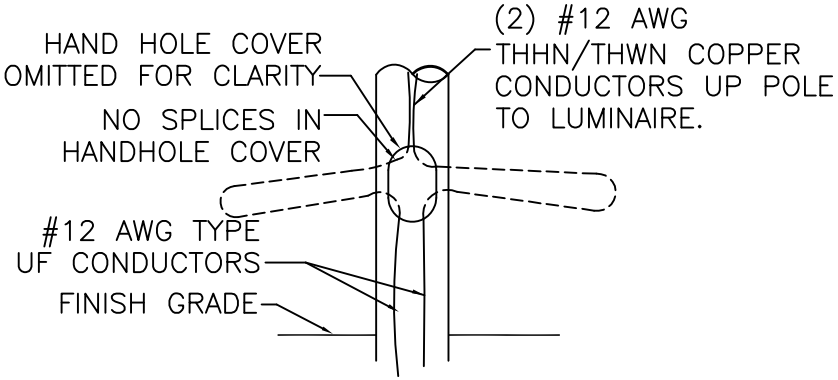

POLE FUSING DETAIL

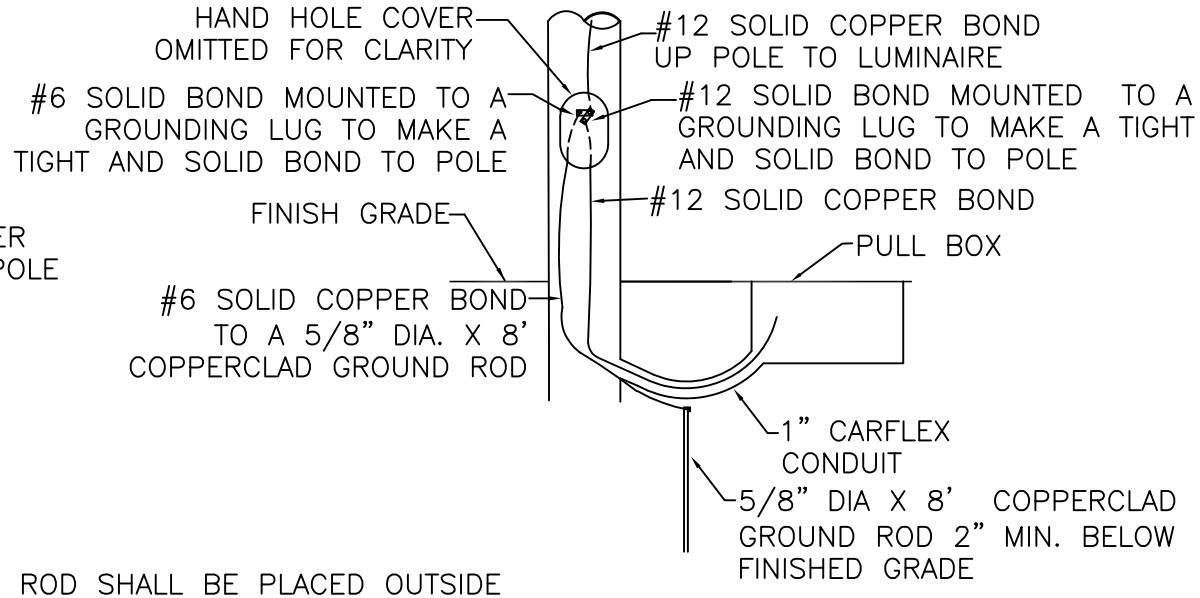

NOTE: GROUND ROD SHALL BE PLACED OUTSIDE THE J-BOX BELOW FINISHED GRADE. BOND WIRE SHALL PASS THROUGH POLE CONDUIT OPENING

POLE GROUNDING DETAIL

GENERAL NOTES

1. ALL SPLICES SHALL SHALL BE DONE USING A BLACKBURN WR-7, WR-9, WR-189, OR WR-279 H TYPE CRIMP CONNECTOR. CRIMPING SHALL BE DONE USING A BURNDY TOOL NO. OS-50 WITH 5/8" DIE SHALL BE USED TO CRIMP THE WR-7 WR-9. A BURNDY TOOL NO. MD6-8 WITH O DIE SHALL BE USED TO CRIMP THE WR-189. A BURNDY TOOL NO. MD6-8 WITH D3 DIE SHALL BE USED TO CRIMP THE WR-279.
2. ALL POLES SHALL BE WIRED USING TWO (2) #12 AWG TYPE THHN/THHN SOLID COPPER CONDUCTORS, 600 VOLT, NEC APPROVED AND ONE (1) #12 SOLID BARE COPPER BOND WIRE. WIRES SHALL RUN FROM THE LUMINAIRE TO A MINIMUM OF TWELVE (12) INCHES BELOW POLE HAND HOLE, FOR TERMINATION.
3. ALL STREETLIGHT CONDUCTORS AND BOND WIRES SHALL BE COPPER. CONDUCTORS FROM PULL BOX TO HAND HOLE SHALL BE AWG TYPE UF INSULATION. CONDUCTORS FROM HAND HOLE TO LUMINAIRE SHALL BE AWG TYPE THHN/THWN. ALL CONDUCTORS SHALL BE STRANDED AND ALL BOND WIRES SHALL BE SOLID.

GILBERT ARIZONA	STANDARD DETAIL	FUSING AND GROUNDING DETAIL APS AREA	APPROVED _____ TOWN ENGINEER _____ DATE	DETAIL NO. GIL-942

NOTES:

PHYSICAL

SIZE	SEE DRAWING
WEIGHT	APPROX. 7 OZ. GROSS
CHASSIS	MOLDED PHENOLIC WITH 3 POLE TWISTLOCK PLUG WITH CROSS LINKED POLYETHYLENE GASKET.
HOUSING	U.V. STABILIZED POLYPROPYLENE WITH ACRYLIC WINDOW WITH ULTRAVIOLET INHIBITOR.
COLOR	DARK BRONZE OR BLUE

ELECTRICAL

SUPPLY VOLTAGE	105–277 VOLTS, 50/60HZ AC
RATINGS LOAD	1800VA MAX. SPST, N.C.
INRUSH CURRENT	130 AMPERES AT 120 VOLTS 65 AMPERES AT 240 VOLTS
OPERATING LEVELS	TURN ON AVERAGE 1FC. .2FC ± TURN ON MAXIMUM 1.8FC RATIO AVERAGE 3
CONTROL POWER	3.2 WATTS, MAX. (2.75 AVERAGE) AT 240 VAC.
DIELECTRICAL STRENGTH	5 KV MIN. BETWEEN ANY CURRENT CARRYING PART AND METAL MOUNTING SURFACE.
LIGHT ARRESTOR	DELUXE–CONTROLLED TYPE EXPULSION ENCLOSED 2.0 KV SPARK OVER MIN. TYPE 10,000 AMPS FOLLOW THROUGH
PHOTOCELL	HERMETICALLY SEALED CDS CELL, MINIMUM SURFACE AREA .75 SQUARE INCHES
TIME DELAY	INSTANT

ENVIRONMENTAL

AMBIENT TEMPERATURE RANGE	–65 DEGREES FAHRENHEIT TO +158 DEGREES FAHRENHEIT
MOISTURE RESISTANCE	100% RELATIVE HUMIDITY

APPROVED MANUFACTURERS:

FISHER PIERCE

120V 7762–EPSTD

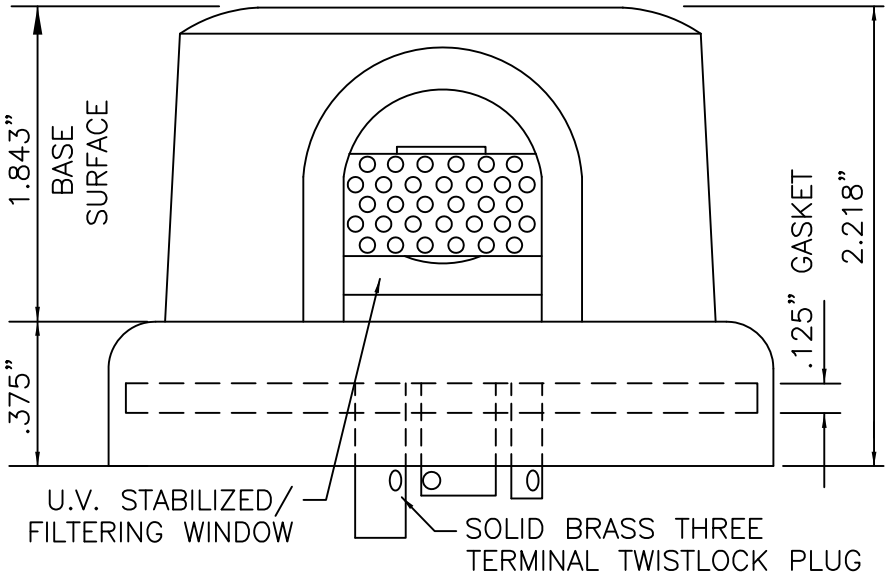

NORTH SIDE VIEW

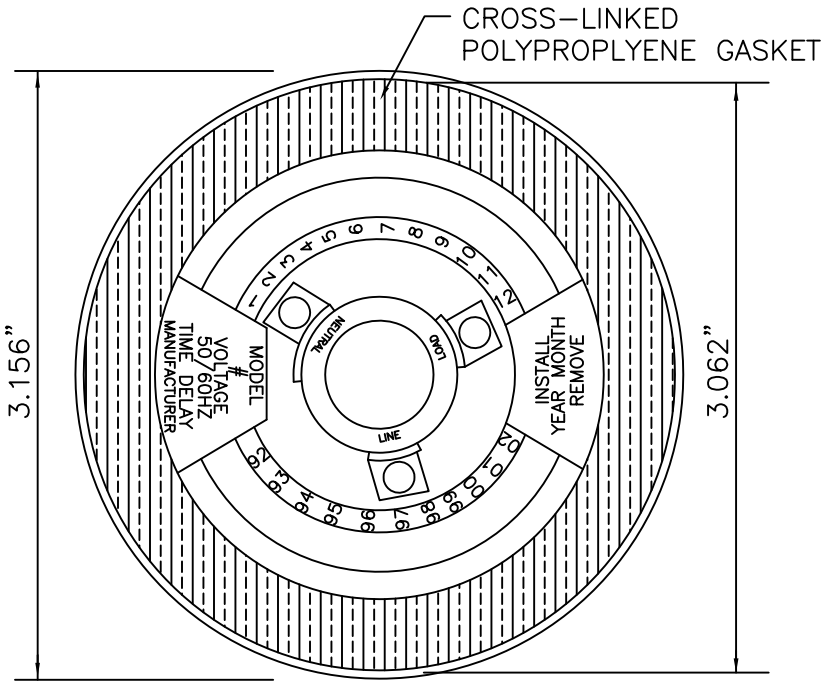

BOTTOM VIEW

GILBERT ARIZONA	STANDARD DETAIL	PHOTO CONTROL DETAIL	APPROVED TOWN ENGINEER DATE	DETAIL NO. GIL-945