MODEL HOME SALES COMPLEX

PROCESS GUIDE AND APPLICATION

Town of Gilbert
Planning and Development Services Division
90 East Civic Center Drive
Gilbert, Arizona 85296

Phone 480/503-6700
Fax 480/497-4923
www.gilbertaz.gov

APPLICATION PROCEDURES
MODEL HOME SALES COMPLEX

The following information is provided to assist applicants in the preparation and submittal of an application for a Model Homes Sales Complex for property within the Town of Gilbert. Model home complexes are permitted for the initial sale of homes within a subdivision or residential condominium development. A model home complex may be constructed prior to the recording of a final plat on the property.

1. *Model Home Building Permits/Builder Sign Package/Pools –*
   - The Homebuilder may pull building permits on each model home prior to submitting the Model Home Complex application.
   - Building permits for the sales/construction office in a model home, sales trailer, or construction trailer *within* the model home complex can be processed before or concurrent with the Model Home Complex application. These permits can also be processed after approval of the model home complex. The location and parking for trailers shall be included in the site plan for the Model Home Complex application if they are to remain during the public use of the model home complex.
   - Building permits for a sales/construction trailer *not within* the model home complex can be issued prior to the approval of the Model Home Complex application if it is required prior to the completion of the model home complex.
   - A miscellaneous building permit is required for the conversion of the sales/construction office in the garage back to the residential garage. It is required before the residential C of O. (www.gilbertaz.gov/eservices/building/pdf/miscpermitap0607.pdf)
   - Pools and other amenities with electrical components are permitted and inspected under separate building permits. Flagpoles, landscape lighting, water fountains, etc. require a miscellaneous building permit. These miscellaneous building permits may be submitted concurrent with the Model Home Complex application.
   - The builder sign package is a separate application.
   - Information regarding landscaping (if any), and compliance with public notification for the Phoenix-Mesa Gateway Airport Overlay District and the Santan Freeway Overlay District is required. A Santan Freeway Affidavit regarding completion of notification requirements is required to be submitted with the model home complex application. (www.gilbertaz.gov/eservices/planning/pdf/Model_Home/AffidavitSantan1104.pdf)

2. *Application Filing* – Applications must be submitted to the Development Services division. For an application to be accepted, the applicant must provide all of the required information described on the submittal checklist at the time of application submittal. Applications are accepted daily until 5:00 p.m. Monday through Friday.

3. *Staff Review* – Upon receiving a complete application, the submitted application will be routed to Town staff for review and comments. After this review is completed, the comments are consolidated and returned to the applicant within ten (10) days of submission. The applicant is responsible for addressing staff comments and submitting revised plans. Staff will then respond to the resubmittal within five (5) days.

4. *Approval* – The Planning Director will approve, approve with modifications and/or conditions, or deny the request.

5. *Building Permits* - A miscellaneous building permit application may be submitted concurrently for the sales office, sales trailer, or construction office if within the model home complex.

6. *Inspections for Model Home Complexes* – The applicant must call for inspection of the sales trailer or construction trailer. The Building Department and the State will each conduct an inspection. The applicant must call for an inspection by the Building Department on the model homes to obtain Certificates of Occupancy. When the landscaping is complete the applicant must call for inspection by Water Conservation staff. The complex may only be used for its intended purpose after completion of all required inspections.

7. *Inspections for Model Home Complex closure* – The applicant must call the Building Department for inspection of the completed conversion of the sales office complex, individual homes and the construction office back to residential use. A miscellaneous building permit is required for the conversion plan.

Model Homes Sales Complex Process

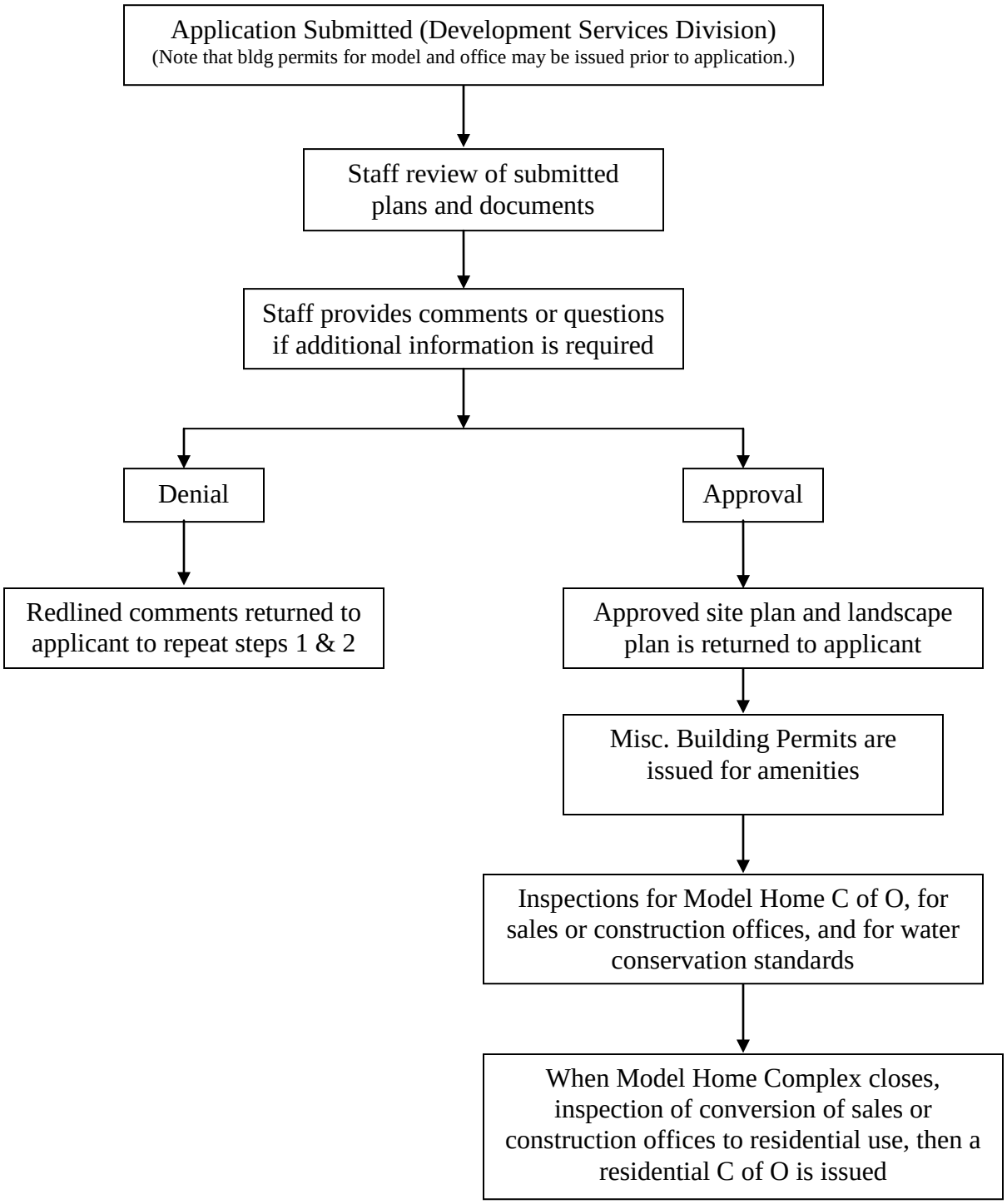

MODEL HOME SALES COMPLEX
CONTENT AND SUBMISSION REQUIREMENTS

1. **Project Narrative**
   - ❑ Describe number of lots included in the model home complex for model homes, parking, sales or construction trailer;
   - ❑ Describe number of lots within subdivision for model homes;
   - ❑ Describe intended use of each model home if used for a sales office, construction office, or design center;
   - ❑ Note intended duration for use of the sales or construction trailer;
   - ❑ Note hours of operation if a generator is used for the trailers; and
   - ❑ Describe dust-proofing methods for parking surface.

2. **Model Home Complex Site Plan**
   - ❑ Vicinity Map;
   - ❑ Subdivision project name on final plat;
   - ❑ Street names;
   - ❑ Location of model home lots, parking areas and sidewalks noting compliance with ADA;
   - ❑ Location of sales or construction trailer, if applicable;
   - ❑ Location of paved street, pedestrian ways, and ADA access routes including slopes from parking areas to the sales office;
   - ❑ Location of walls, lighting (include details for electric), and signage;
   - ❑ Location of signage for public notification of the Phoenix-Mesa Gateway Airport or the Santan Freeway (if applicable);
   - ❑ Phoenix-Mesa Gateway Airport or Santan Freeway sign verbiage (if applicable); and
   - ❑ Standard notes are attached that are required on the site plan.

3. **Conversion Site Plan**
   - ❑ Provide site plan noting all changes to the model home complex area after the sales office closes. Site plan note shall describe changes to the parking lot, sidewalks, garage doors, walls, fences, landscaping, lighting, flag poles, signage, driveways, etc.

4. **Miscellaneous Building Permits**
   - ❑ These may be submitted concurrently or after the Model Home Complex application is approved;
   - ❑ Provide for flagpoles, water features, landscape lighting, pools, trellis features, etc.; and
   - ❑ A conversion plan for the sales/office in the garage to return to residential use shall be submitted prior to request for a Residential C of O.

5. **Floor Plans**
   - ❑ Floor plan of garage/office, showing ADA accessibility requirements; and
   - ❑ Floor plan showing conversion of office back to garage for residential use.

6. **Water Conservation**
   - ❑ Landscape plan for each lot in model home complex signed by a registered Landscape Architect or Landscape Designer;
   - ❑ The landscape plan for the front and back yard shall include location of turf; number and type of trees, shrubs, and plants; and location of fountain, pool and water features. Provide square footage of surface area for pool and water features;
   - ❑ Provide a completed NPCCP Water Conservation form for each lot in model home complex; and

- ❑ Access web site for Water Conservation ordinance #1316 (www.gilbertaz.gov/ordinances/waterconservation.cfm).

7. Santan Freeway Corridor Overlay District Notification

Notification is required for all residential developments completely or partially located within 1,000 feet of the exterior edge of the right-of-way boundary of the Santan Freeway alignment. Sales and leasing offices for residential developments must provide notice to prospective buyers or tenants that the development is located within the Santan Freeway Corridor Notification Area. Such notice must consist of a freestanding sign:

a. Measuring at least 4 feet by 4 feet;

b. Installed at the entrance to each sales or leasing office;

c. Installed prior to commencement of sales, including pre-sales, or leasing and shall remain in place until the sales or leasing office is permanently closed;

d. Including the following language in letters of at least 1 inch in height: "This development is located within the Santan Freeway Corridor Notification Area. For additional information contact the Arizona Department of Transportation at: *"(Arizona Department of Transportation Community Relations Office telephone number)"*; and

e. With lettering a minimum of 30 inches above grade.

Please reference the Land Development Code Chapter II, Article 3.3: Santan Freeway Corridor Overlay District for additional information (http://www.gilbertaz.gov/planning/default.cfm).

8. Phoenix-Mesa Gateway Airport Overlay District Notification

Overflight Areas 2 & 3:

Sales and leasing offices for residential developments must provide notice to prospective buyers and tenants that the project is located within Overflight Area 2. The notice must consist of a freestanding sign:

a. Measuring at least 4 feet by 4 feet;

b. Installed at the entrance to each sales or leasing office;

c. Installed prior to commencement of sales, including pre-sales, or leasing and shall remain in place until the sales or leasing office is permanently closed.

d. Including the following language in letters of at least 1 inch in height: "This subdivision is located within the Phoenix-Mesa Gateway Airport Overlay District Overflight Area 2. For additional information contact the Arizona Department of Real Estate at: *(INSERT CURRENT TELEPHONE NUMBER)* or Phoenix-Mesa Gateway Airport Public Relations Office at: *(INSERT CURRENT TELEPHONE NUMBER)."*

e. With lettering a minimum of 30 inches above grade.

Please reference the Land Development Code Chapter II, Article 3.2: Phoenix-Mesa Gateway Airport Overlay District for additional information (http://www.gilbertaz.gov/planning/default.cfm).

MODEL HOME SALES COMPLEX APPLICATION

Received By:

Subdivision Final Plat Name: _____

Subdivision Marketing Name: _____

Number of lots for sale that apply to this set of model homes: _____

Lot numbers for model homes, parking, sales trailer, construction trailer, or landscaping: _____

Tax Parcel Number for each lot in complex: _____

_____

Address for each lot in complex: _____

_____

_____

Overlay Zoning District:
(if applicable) ☐ Santan Freeway Corridor ☐ Phoenix-Mesa Gateway Airport

Property Owner:

Company: _____
Contact Name: _____ E-mail: _____
(print)
Address: _____
City, Zip: _____
Phone: _____ Fax: _____

Signature: _____ Date: _____
* Property Owner's signature certifies that the property that is the subject of the proposed project is in compliance with Town codes. A letter of authorization from the property owner is required if the application is not signed by the owner.

Applicant/Contact:

Company: _____
Contact Name: _____ E-mail: _____
(print)
Address: _____
City, Zip: _____
Phone: _____ Fax: _____
Signature: _____ Date: _____

FOR STAFF USE ONLY

Submittal Date _____ Case Number _____

Fee Paid EDEN Permit Number
Use EDEN Type: PMH

TOWN OF GILBERT
A Community of Excellence

Model Home Complex Application

(480) 503-6700
www.gilbertaz.gov

Eden Permit Number **MH-**_____ **Received by:** _____

Lot Address _____

Recorded Subdivision Name_____ **Lot No.**_____

Builder /Owner_____

Applicant _____
(Print Name) **Phone Number**

_____
Signature owner/authorized agent **Date**

MODEL HOME REQUIREMENTS: (Per Town of Gilbert Code sec. 66-363)

1. The Model Home Complex in this Subdivision has _____ model home lots. One form is required for each lot (including parking and construction/sales trailer lots).

2. The landscapable area of this lot is _____ square feet.

3. The water intensive landscape of this lot measures _____square feet. (This number should equal the total of the individual water intensive plants square footage at maturity and the square footage of any water feature as listed below)

Turf measurements:	_____sf
Pool surface area measurement:	_____sf
Water feature surface area measurement:	_____sf
Measurement of any plant not listed on the low water use plant list by ADWR	_____sf
Total:	_____sf (needs to match the number in #3)

Definition: Water intensive landscape is defined as turf, high water use vegetation, and the total surface area of all bodies of water used as an integral part of the landscaped area to include swimming pools, ponds, fountain, streams, waterfalls, artificial lakes and other artificial water structures.

4. The water intensive landscape of this lot is _____% of the landscapable area of the lot. (Divide the line 3 total by line 2) Total water intensive landscape **shall not exceed 20%** of the landscapable area.

Please initial the boxes below to indicate the requirements have been read and accepted.

☐ Water intensive landscaping shall be located only where it is functionally useful such as in play areas or close to the house for energy efficiency

☐ All irrigation systems must be efficient irrigation systems.

☐ The homebuilder shall make available and display in a prominent manner at the model home site information on low water use landscaping and/or landscape packages with low water use landscaping. The information to be distributed will be supplied by the Town of Gilbert.

☐ Model homes shall have landscaping plans approved by the Water Conservation Division prior to issuance of building permits, for which no variance may be granted, and which meet the aforementioned requirements.

☐ All water intensive plant material (see definition above) and all water features must have the square footage for each item listed on the submitted plans. Failure to list this information on the plans could result in a delay in issuance of the C of O.

OFFICE USE ONLY – DO NOT WRITE IN THE BOX

PLAN APPROVAL

1st Submittal Plans Approved / Denied _____
Date

2nd Submittal Plans Approved / Denied _____
Date

Comments:
_____
_____
_____
_____

INSPECTION

1st Inspection Approved / Denied _____
Date

2nd Inspection Approved / Denied _____
Date

Comments:
_____
_____
_____
_____

Model Home Sales Complex Checklist

An incomplete application will not be accepted unless a waiver of any of the following submittal requirements is documented by Town Staff in the Town's Customer Agreement Binder prior to submittal.

REQUIRED MATERIALS	Applicant Checklist	Staff Verification
Application……	☐	☐
Fee (see Planning fee schedule)…….....	☐	☐
Project Narrative ……..…....…….....	☐	☐
Non-Per Capita Water Conservation Form for each lot…….....	☐	☐
Site Plan - 6 copies – Blueline or blackline prints (24" x 36") **folded** to approximately (9" x 12")…….....	☐	☐
Conversion Plan (may be included on the site plan) 3 copies – Blueline or blackline prints (24" x 36") **folded** to approximately (9" x 12")……...	☐	☐
Floor Plan conversion of garage from office to residential use (this may be submitted separately at time of conversion) …….....	☐	☐
Landscape plan for each lot 3 copies – Blueline or blackline prints (24" x 36") **folded** to approximately (9" x 12")……...	☐	☐
Notification Plan for Santan Freeway Corridor Overlay District (if applicable)…….....	☐	☐
Affidavit for Santan Freeway Corridor Overlay District (if applicable)…….	☐	☐
Notification Plan for Phoenix-Mesa Gateway Airport Overlay District (if applicable)…….…...	☐	☐

STANDARD NOTES FOR MODEL HOME COMPLEX

1. This project must comply with all conditions approved through Zoning, Design Review and Final Plat approval.

2. A separate building permit and inspection is required for:
    a. All exterior signage, flagpoles, pools and other amenities including electrical components;
    b. Sales office including parking area and accessibility;
    c. Construction office;

3. A landscape inspection for the Water Conservation Department is required prior to issuance of a certificate of occupancy.

4. No exterior storage of any kind to be on site.

5. Undeveloped lots must be dust proofed if used.

6. ADA signage must meet Town of Gilbert details 014/015 (www.gilbertaz.gov/eservices/building/pdf/typicals/typsign20802.pdf - and- www.gilbertaz.gov/eservices/building/pdf/typsign10802.pdf).

7. The following items shall be in place prior to occupancy:
    d. Permanent water supply with a fire hydrant located within 150 feet of the structures, as the hose lies.
    e. Paved or other approved driving surfaces and turn-arounds.
    f. Permanent street signage.
    g. Permanent building addresses attached to the structures.

8. When the sales/ construction office use is terminated, all model complex units shall be converted to residential occupancy standards, all exterior improvements unique to the complex removed, all signage removed and a final inspection completed on all model complex units prior to residential occupancy of the sales office unit. Conversion shall be completed per conversion plan. The conversion shall be permitted and inspected under a separate building permit.

AFFIDAVIT OF SANTAN FREEWAY OVERLAY DISTRICT ORDINANCE NO. 1250 NOTIFICATION REQUIREMENTS

The undersigned Applicant has complied with the Santan Freeway Overlay District by providing the requirements of Subsection F, Paragraphs 1 through 3, the notification requirements for the Model Home Complex, (case number) located at _____ on _____.

1. Plats shall note the potential for objectionable freeway noise by including the following on the plat: `This property, due to its proximity to the Santan Freeway, is likely to experience noise from the freeway, which could be of concern to some individuals."

2. The public report shall include a statement disclosing the property's location relative to the freeway, and further include the following: "Due to this property's proximity to the Santan Freeway, it is likely to experience noise from the freeway, which could be on concern to some individuals."

3. Provide proper and timely notice to prospective buyers. Unless a different method of notice is approved by a rezoning ordinance, such notice shall consist of a sign at least 4' x 4' installed in a conspicuous place in the parking lot of the sales office at each model home complex stating the following: "This subdivision is located within the Gilbert Santan Freeway Corridor Notification Area. For additional information contact the Arizona Department of Transportation at: "(Arizona Department of Transportation Community Relations Office telephone number) ". The developer shall provide an affidavit to the Town evidencing compliance with the requirements of Subsection F, Paragraphs 1 through 3.

Please provide documentation that the above 3 items have been satisfied.

For Applicant:

_____
Company Name

_____
Applicant

Subscribed and sworn to me on this _____ day of _____, 2007 by _____.

IN WITNESS WHEREOF, I Hereto set my hand and official seal.

_____
Notary Public

My Commission expires: _____

GILBERT
ARIZONA

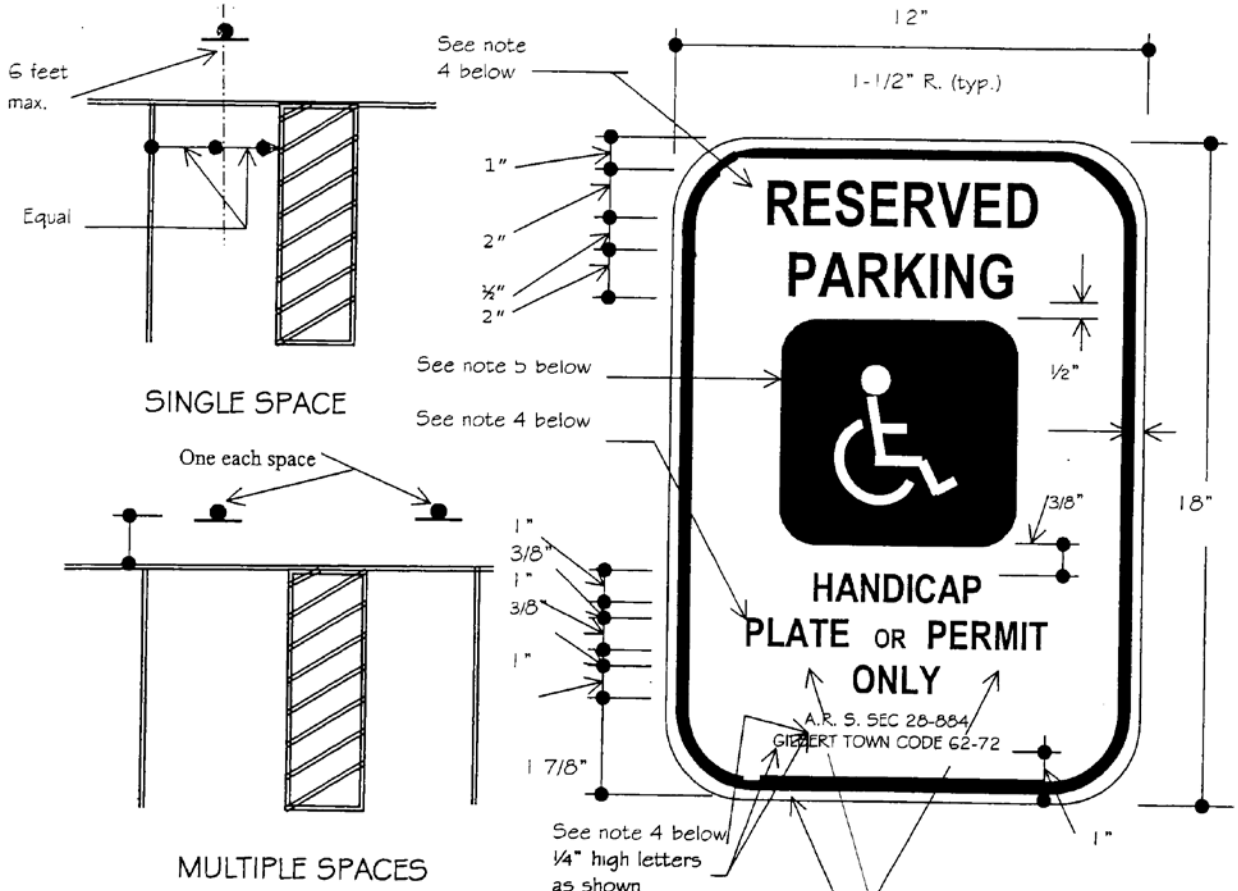

NOTES:

1) The bottom of the sign should be no less than 36 inches and no more than 54 inches above finish grade.
2. Signs shall be properly centered within the parking space.
3. The sign face should be located no farther than 6 feet from the front of each parking space.
4. All lettering series 'C', green color
5. International symbol of accessibility shown white on 6"x6" blue field with ½" radius corners.

Town of Gilbert 90 E. Civic Center Dr. Building and Code Compliance	ACCESSIBLE PARKING SIGN	TOG/014 Issued 06/00

GILBERT
ARIZONA

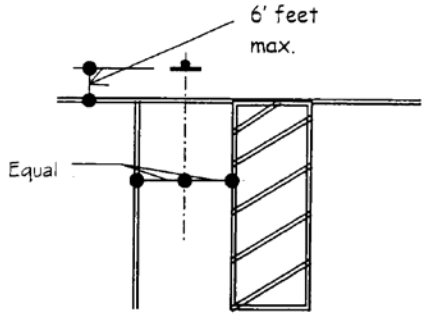

SINGLE SPACE

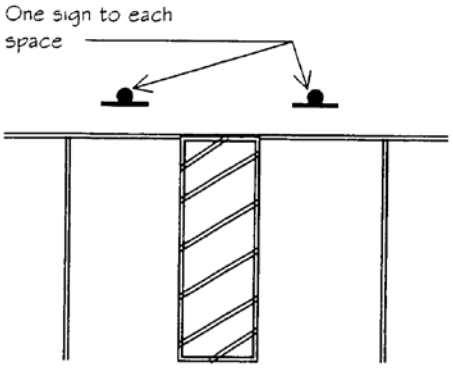

MULTIPLE SPACES

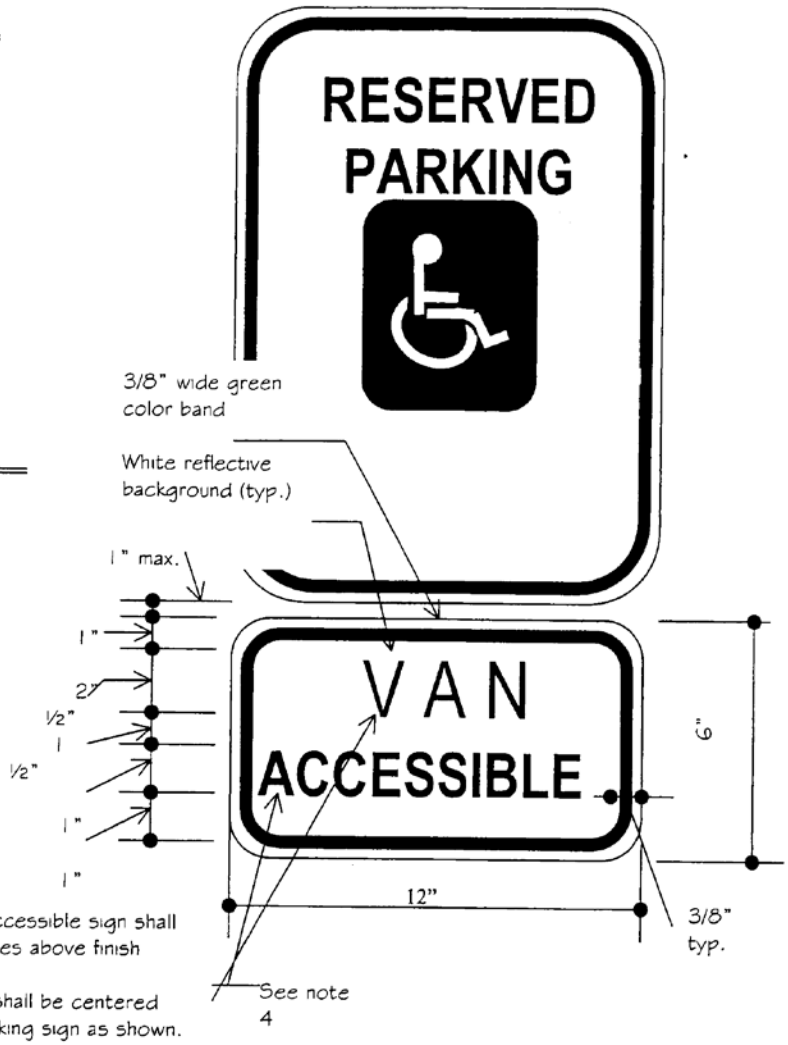

NOTES:

1. The bottom of the van accessible sign shall be no less than 36" inches above finish grade
2. The van accessible sign shall be centered under the accessible parking sign as shown.
3. For more information on reserved parking sign-see accessible parking detail.
4. All lettering series 'C', green color.

Town of Gilbert 90 E. Civic Center Dr. Building and Code Compliance	VAN ACCESSIBLE PARKING SIGN	**TOG/015** Issued 06/00